Glenair®

HIGH-PERFORMANCE SERIES 89

NANOMINIATURE CONNECTORS

FOR INTERCONNECT APPLICATIONS

APRIL 2013

SERIES 89 NANO MINIATURE

HIGH DENSITY NANOMINIATURE

Mil qualified and innovative Glenair circular and rectangular solutions

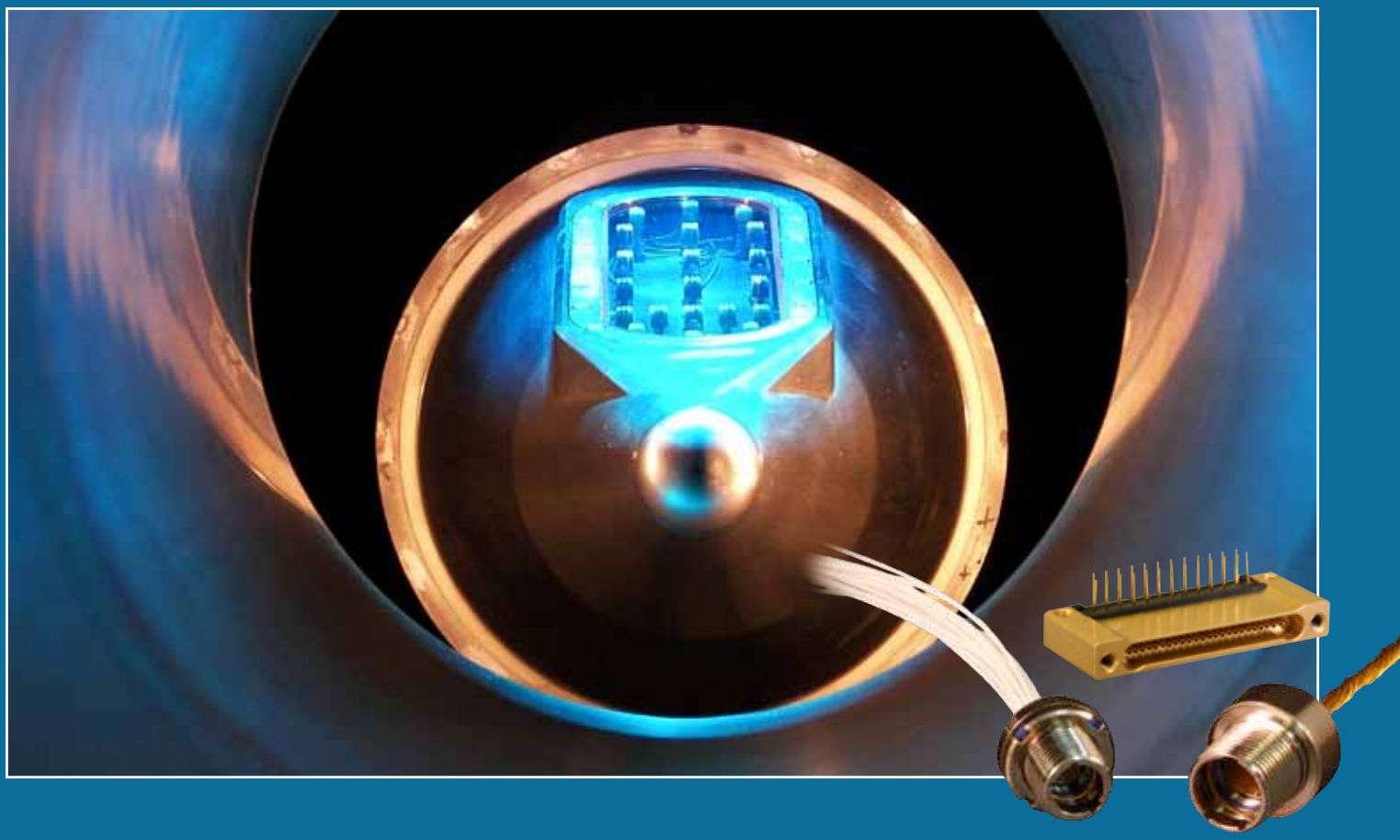

Now available from Glenair: Nanominiature circular and retangular connectors. The smallest and lightest mil-spec connector in the business. These MIL-DTL-32139 qualified connectors for mission–critical board–to–wire applications, offer superior mating and unmating performance and environmental resistance. TwistPin equipped Nanominiature connectors are set on .025 inch contact spacing, rated for 1 AMP, and are precision machined from aluminum, titanium or stainless steel. Designed to accomodate size #30 and #32 gauge wire, both rectangular and circular versions are available in prewired pigtail or printed circuit board configurations.

Glenair®

Glenair, Inc.
1211 Air Way
Glendale, CA
91201-2497
818-247-6000
sales@glenair.com
www.glenair.com

Series 89 Nanominiature Connectors
Table of Contents

General Information

Product Line Overview	A-1	RoHS Compliance Information	A-12
Performance Summary, Materials and Finishes	A-4	Series 89 Plating Codes and Anti-Static Dust Caps	A-13
MIL-DTL-32139 Connector Specifications	A-5	Series 89 Single Row Contact Arrangements	A-14
Space Grade Product Information	A-8	Series 89 Double Row Contact Arrangements	A-15
High-Temperature Mod Code 428	A-11	Series 89 Contact Arangements and Keyway Positions	A-16

Insulated Wire Circular Connectors

Front Panel Mount

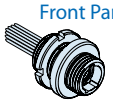
Breakaway Receptacle B-1

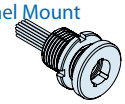
Threaded Receptacle B-3

Rear Panel Mount

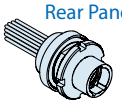
Breakaway Receptacle B-5

Threaded Receptacle B-7

Inline

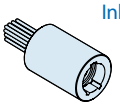
Breakaway Receptacle B-9

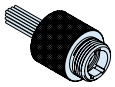
Threaded Receptacle B-11

Plug

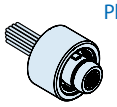
Threaded Plug B-13

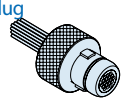
Breakaway Plug B-15

Circular Connectors with PCB Termination

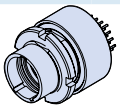
Breakaway, rear panel mount receptacle C-1

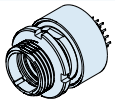
Threaded, rear panel mount receptacle C-3

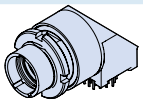
90° Breakaway rear panel mount receptacle C-5

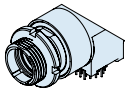
90° Threaded rear panel mount receptacle C-8

Single Row Connectors

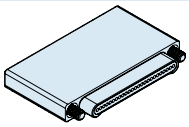
Connector Saver D-1

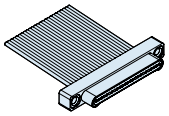
Insulated Wire D-3

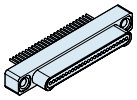
Uninsulated Wire D-5

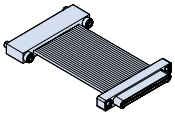
Back-to-Back Cables D-7

Dual Row Connectors

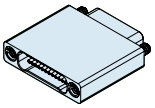
Connector Saver E-1

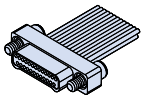
Insulated Wire E-3

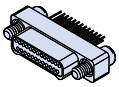
Uninsulated Wire E-5

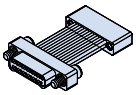
Back-to-Back Cables E-7

Insulated Wire MIL-DTL-32139 Connectors

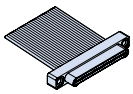
Single Row, Insulated Wire F-1

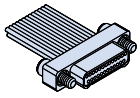
Dual Row, Insulated Wire F-3

PCB Thru-Hole and Surface Mount Single Row Connectors

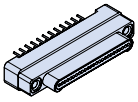
Thru-Hole Vertical G-1

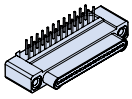
Thru-Hole Right Angle G-5

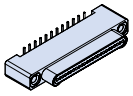
SMT Vertical G-9

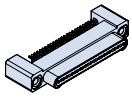
SMT Right Angle G-13

PCB Thru Hole and Surface Mount Dual Row Connetors

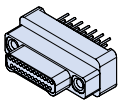
Thru-Hole Vertical H-1

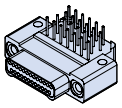
Thru-Hole Right Angle H-5

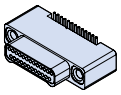
SMT Vertical H-9

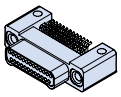
SMT Right Angle H-13

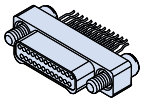
SMT Straddle H-17

Index

© 2012 Glenair, Inc. U.S. CAGE Code 06324 Printed in U.S.A.

GLENAIR, INC. • 1211 AIR WAY • GLENDALE, CA 91201-2497 • 818-247-6000 • FAX 818-500-9912
www.glenair.com E-Mail: sales@glenair.com

Series 89 Nanominiature Connectors

Key Features

- 1 AMP Current Rating
- .025 Inch (0.64 mm.) Contact Spacing
- #30 and #32 Gage Wire Accommodation
- Single and Double Row
- Metal Shell, Aluminum, Titanium or Stainless Steel
- TwistPin Contact System
- Gold Alloy Contact, Unplated
- Thru-Hole and Surface Mount PCB Versions

Nanominiature Connectors at a Glance

Nanominiature connectors are high reliability ultraminiature interconnects intended for critical applications where size and weight restrictions will not allow the use of larger connectors.

Typical applications include miniaturized electronics boxes used in UAV's, satellites, missile systems, and geophysical instruments. Contact spacing of 0.025 inches combined with a rugged contact system allow these nano connectors to be used in demanding environments where commercial-grade connectors should not be used.

How Small Are They?

D-Subminiature Connector
Contacts on 0.109 Inch Spacing

Micro-D Connector
Contacts on 0.050 Inch Spacing

Nano Connector
Contacts on 0.025 Inch Spacing

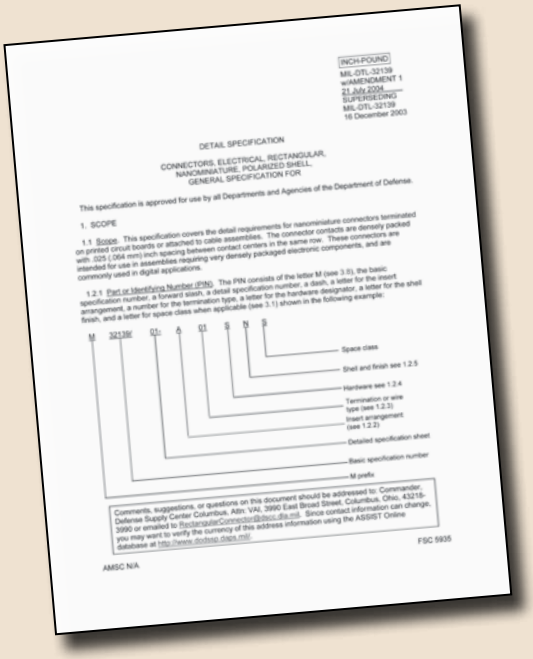

INCH-POUND
MIL-DTL-32139
w/AMENDMENT 1
21 July 2004
SUPERSEDING
MIL-DTL-32139
16 December 2003

DETAIL SPECIFICATION

CONNECTORS, ELECTRICAL, RECTANGULAR,
NANOMINIATURE, POLARIZED SHELL,
GENERAL SPECIFICATION FOR

This specification is approved for use by all Departments and Agencies of the Department of Defense.

1. SCOPE

1.1 Scope. This specification covers the detail requirements for nanominiature connectors terminated on printed circuit boards or attached to cable assemblies. The connector contacts are densely packed with .025 (.064 mm) inch spacing between contact centers in the same row. These connectors are intended for use in assemblies requiring very densely packaged electronic components, and are commonly used in digital applications.

1.2.1 Part or Identifying Number (PIN). The PIN consists of the letter M (see 3.5), the basic specification number, a forward slash, a detail specification number, a dash, a letter for the insert arrangement, a number for the termination type, a letter for the hardware designator, a letter for the shell finish, and a letter for space class when applicable (see 3.1) shown in the following example:

M 32139/ 01- A 01 S N S

Space class
Shell and finish see 1.2.5
Hardware see 1.2.4
Termination or wire type (see 1.2.3)
Insert arrangement (see 1.2.2)
Detailed specification sheet
Basic specification number
M prefix

Comments, suggestions, or questions on this document should be addressed to: Commander, Defense Supply Center Columbus, Attn: VAI, 3990 East Broad Street, Columbus, Ohio, 43218-3990 or emailed to RectangularConnector@dscc.dla.mil. Since contact information can change, you may want to verify the currency of this address information using the ASSIST Online database at http://www.dodssp.daps.mil.

FSC 5935

AMSC N/A

MIL-DTL-32139 At-A-Glance

High reliability nanominiature connectors are covered by millitary specification MIL-DTL-32139. This document assures intermateability and interchangeability. The specification covers pre-wired single and double row metal shell connectors—manufactured and qualified by Glenair. The Glenair Series 89 products in this catalog also meet the electrical, mechanical and interface requirements of the military specification, but offer options not specifically covered in the mil-spec.

Dimensions in inches (millimeters) and are subject to change without notice.

© 2013 Glenair, Inc.

GLENAIR, INC. • 1211 AIR WAY • GLENDALE, CA 91201-2497 • 818-247-6000 • FAX 818-500-9912
www.glenair.com E-Mail: sales@glenair.com

Series 89 Nanominiature Connectors
Product Line Overview

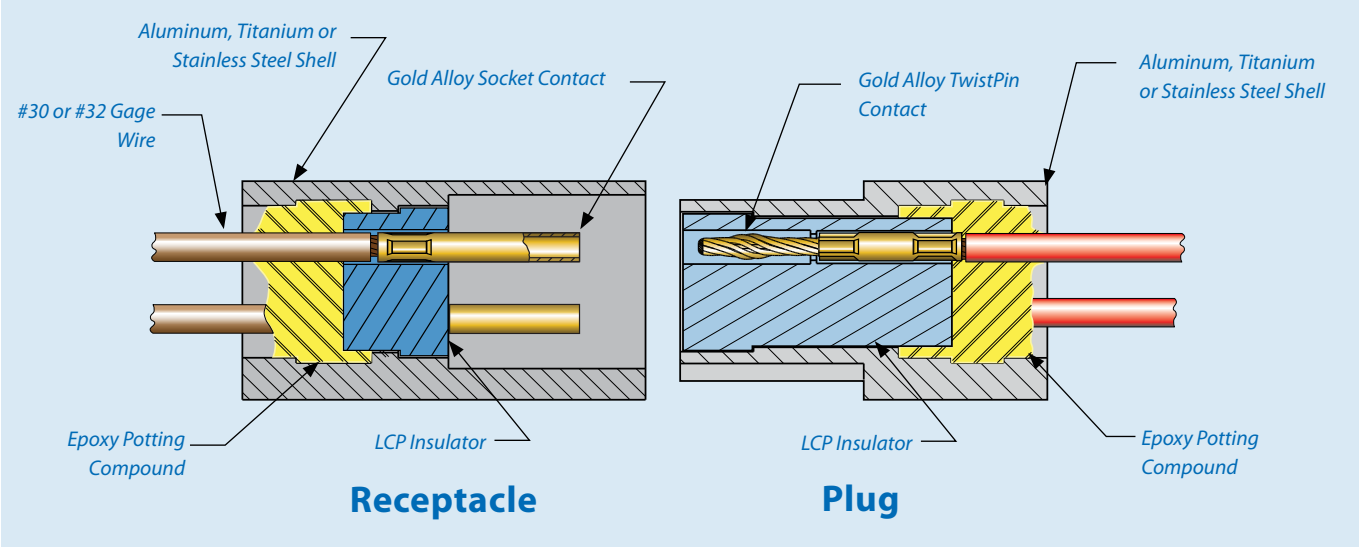

The Nano TwistPin Advantage

MIL-DTL-32139 defines the minimum acceptable performance levels for Nanominiature connectors. Manufacturers are given considerable leeway when it comes to contact design, wire termination, contact finish and material selection. Stamped and formed contacts, for example, are used in nanominiature connectors due to their low-cost and ease of manufacture. But independent testing clearly shows that TwistPin style contacts provide superior performance in hostile environments. If you have already made the decision to use a Nano sized connector, then you owe it to yourself to understand the very real differences between stamped pins and the Glenair TwistPin Contact System.

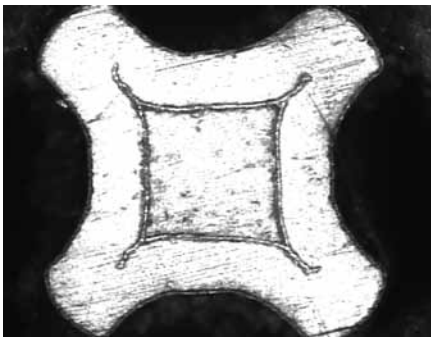

Transverse Cross-Section of a TwistPin Contact Crimped to Solid Wire

Three Reasons to Choose TwistPins

1 Gas-Tight Crimp Joint

TwistPin contacts assure gas-tight crimp joints for stable resistance after years of environmental exposure. The photograph at left demonstrates the superiority of a gas-tight, void-free 4-indent crimp.

2 Better Shock and Vibration Performance

The nanominiature TwistPin contact is made from six strands of wire.The five outer strands provide multiple points of contact with the mating socket contact for superior shock and vibration performance.

3 Corrosion-Proof Contact Alloy

Both the TwistPin contact and the mating socket contact are made from a special alloy consisting of 71% gold, 8% platinum and 5% silver alloyed with copper and zinc.

Dimensions in inches (millimeters) and are subject to change without notice.

© 2013 Glenair, Inc.

GLENAIR, INC. • 1211 AIR WAY • GLENDALE, CA 91201-2497 • 818-247-6000 • FAX 818-500-9912
www.glenair.com E-Mail: sales@glenair.com

Series 89 Nanominiature Connectors Performance Summary, Materials and Finishes

Glenair's 0.025 Inch Contact Spacing for Series 89 Nanominiature Connector

is the latest evolution in rectangular shaped connectors for board-level I/O applications. Featuring gold alloy TwistPin contacts and aluminum, titanium or stainless steel shells, the Nanominiature is the smallest, yet remarkably robust, connector we make. Glenair is one of the first interconnect manufacturers to qualify to the new MIL-DTL-32139 Nanominiature Mil-Spec for these precision-machined connectors that deliver both ultra high density and maximum weight and space savings. These high reliability ultra miniature interconnects are ideal for critical applications where size and weight restrictions preclude the use of larger connectors such as M24308 D-Sub-miniatures. Ideal for military applications of all types, the rugged contact system allows Glenair's Nano connectors to be used in the most demanding miniaturized applications. The Glenair Nano contact system consists of a TwistPin (a miniaturized version of the Glenair Micro-D TwistPin) and a tubular socket providing excellent durability and superior resistance to shock and vibration. Accommodating #30 or #32 AWG wire, Nano TwistPin contacts handle 1 AMP current rating and 70 Volts AC RMS operating voltage.

Series 89 Nanominiature Connector Performance Summary	
Contact Spacing	.025" (0.64) Contact Centers
Wire Accommodation	#30-#32 AWG
Current Rating	1 AMP Maximum
Voltage Rating (DWV)	250 VAC RMS Sea Level, 100 VAC RMS 70,000 Feet
Insulation Resistance	5000 Megohms Minimum
Operating Temperature	-55° C. to +125° C.
Optional High Operating Temperature	Mod Code 428 rated up to 400° C.
Contact Resistance	71 Millivolt Drop Maximum, 1 AMP Current, #30 AWG Wire
Vibration	20 g's, in Accordance with EIA-364-28, Condition IV
Shock	100 g's, in Accordance with EIA-364-27, Condition G
Durability	200 Mating Cycles
Corrosion Resistance	48 Hours Salt Spray In Accordance With EIA-364-26, Condition B
Humidity	96 Hours, In Accordance with EIA-364-31 Condition A
Contact Engaging/Separation Force	5 Ounce Maximum, 0.4 Ounce Minimum
Thermal Vacuum Outgassing	Total Mass Loss (TML) 1.0% Max., Volatile Condensible Material (VCM) 0.1% Max.

Materials and Finishes	
Connector Shell	Aluminum Alloy, Cadmium Plated per SAE-AMS-QQ-P-416 Type II Class 1. Aluminum Alloy, Electroless Nickel Plated Per SAE-AMS-C-26074, Class 3 or 4, Grade B Titanium Alloy per MIL-T-81556, Unplated 300 Series Stainless Steel per ASTM A582
Insulator	Liquid Crystal Polymer (LCP), per MIL-M-24519 GLCP-30F, 30% Glass-Filled
Pin Contact	Spring Temper Gold Alloy, Unplated, Per ASTM B477 and ASTM B541.
Socket Contact	Gold Alloy, Unplated, Per ASTM B477 or ASTM B541.
Hardware	300 Series Stainless Steel
PCB Trays	Liquid Crystal Polymer (LCP), per MIL-M-24519 GLP-30F, 30% Glass-Filled
Encapsulant	Epoxy

Dimensions in inches (millimeters) and are subject to change without notice.

© 2013 Glenair, Inc.

GLENAIR, INC. • 1211 AIR WAY • GLENDALE, CA 91201-2497 • 818-247-6000 • FAX 818-500-9912
www.glenair.com E-Mail: sales@glenair.com

1 SCOPE

1.1 **Scope**. This specification covers performance requirements for Glenair nanominiature connectors manufactured in accordance with MIL-DTL-32139.

1.2 **Description**. Metal shell nanominiature connectors on .025 inch (0.64 mm) centers, with TwistPin contacts.

2 ORDER OF PRECEDENCE

2.1 **Order of Precedence**. In the event of a conflict between the requirements of this specification and the references cited herein, this document takes precedence. The requirements set forth in customer specifications and Glenair detail drawings shall take precedence over this document.

3.1 ELECTRICAL REQUIREMENTS

3.1.1 **Insulation Resistance**. 5,000 megohms minimum between any pair of contacts and any contact and the shell when tested in accordance with EIA-364 Procedure 21. Test voltage 100 volts DC.

3.1.2 **Dielectric Withstanding Voltage**.

3.1.2.1 **Dielectric Withstanding Voltage (sea level)**. 250 volts ac, rms 60 Hz. Connectors shall show no evidence of breakdown or flashover when subjected to the DWV test of EIA-364 Procedure 20.

3.1.2.2 **Dielectric Withstanding Voltage (70,000 feet).** 100 volts ac, rms 60 Hz. Connectors shall show no evidence of breakdown or flashover when subjected to the DWV test of EIA-364 Procedure 20.

3.1.3 **Contact Resistance**

3.1.3.1 **Contact Resistance**. The voltage drop of a mated pair of contacts attached to wires shall not exceed 71 millivolt drop maximum using a 1 ampere test current, when tested in accordance with EAI-364-06, using M22759/33-30 wire.

3.1.4 **Low Signal Level Contact Resistance**. When tested with a micro-ohmeter using a test current of 10 milliamperes maximum, the resistance of a mated pair of contacts shall be 71 milliohms maximum using M22759/33-30 wire. Test procedure shall be in accordance with EIA-364-23.

3.1.5 **Contact Current Capability**. Contacts shall be capable of carrying 1.0 ampere in continuous duty operation from -55° C to +125° C when tested in accordance with EIA-364-70.

3.1.6 **Magnetic Permeability**. Magnetic permeability, when tested in accordance with EIA-364-54, shall not exceed 2 mu.

3.2 MECHANICAL REQUIREMENTS

3.2.1 **Contact Engaging and Separation Force**. Maximum engaging force shall be 5.0 ounces when tested in accordance with MIL-DTL-32139 paragraph 4.7.5. Minimum separation force shall be 0.4 ounces.

3.2.2 **Connector Mating and Unmating Force**. The maximum mating and unmating force shall not exceed a value equal to 7 ounces times the number of contacts, when tested per MIL-DTL-32139 paragraph 4.7.6. Mate connectors three times before initial measurements are taken.

© 2013 Glenair, Inc.

GLENAIR, INC. • 1211 AIR WAY • GLENDALE, CA 91201-2497 • 818-247-6000 • FAX 818-500-9912
www.glenair.com E-Mail: sales@glenair.com

3.2.3 **Contact Retention**. Contacts, when tested in accordance with EIA-364-29, shall withstand a 2 pound axial load for a minimum of 5 seconds.

3.2.4 **Crimp Tensile Strength**. Wire shall not break or pull out of crimp joints at an applied force of less than 1.0 pound (0.44 kg) for 30 AWG wire, when tested in accordance with EIA-364-08. Wire breakage other than at the crimp shall not constitute failure.

3.2.5 **Insert Retention**. Inserts shall not be dislodged or moved from their original position when subjected to an axial load of 50 pounds per square inch when tested in accordance with EIA-364-35.

3.2.6 **Resistance to Soldering Heat.** There shall be no degradation of the plastic, bonding adhesives, or sealing elastomers. Connector insulators shall also be capable of withstanding solder heat without evidence of deteriorating, deforming, or change of physical dimensions in accordance with EIA-364-56.

3.2.7 **Solderability**. Printed circuit terminals shall meet the solderability requirements of MIL-STD-202 Method 208.

3.2.8 **Durability**. 200 mating and unmating cycles in accordance with test procedure EIA-364-09. Engaging and separation force and mating forces shall not exceed the requirements of 3.2.1 and 3.2.2. Connectors shall withstand shock, vibration and DWV tests following durability.

3.3 ENVIRONMENTAL REQUIREMENTS

3.3.1 **Salt Spray (corrosion)**. Nickel-plated aluminum connectors shall show no exposure of base metal due to corrosion when subjected to the salt spray test of EIA-364-26, condition B, with a 48 hour duration. Stainless and titanium shell connectors shall withstand 500 hour salt spray without corrosion detrimental to the operation of the connector. In addition, connectors shall meet contact resistance, low circuit level contact resistance and mating force requirements.

3.3.2 **Fluid Immersion**. Connectors shall meet mating force requirements following 20 hours immersion in synthetic lubricating oil, 2 hours in Perchloroethylene cleaning solvent, and 1 hour immersion in coolanol 25, when tested in accordance with MIL-DTL-32139 paragraph 4.7.17. There shall be no degradation of the plastic, bonding adhesives, or elastomers.

3.3.3 **Thermal Vacuum Outgassing**. Connector shall not exceed 1.0% total mass loss (TML) or 0.1% total volatile condensible materials (VCM) when tested in accordance with ASTM E595.

Outgassing Properties of Nanominiature Components

Component	Material	Brand Name	% Total Mass Loss (TML)	% Collected Volatile Condensable Material (VCM)	Test Report
Thermoplastic Insulators and PCB Trays	Liquid Crystal Polymer	Vectra® C-130	0.03	0.00	NASA Test #GSC17478
Potting Compound	Epoxy	Hysol C9-4215	0.48	0.01	Glenair Test
Wire	Tefzel®	Tefzel®	0.22	0.01	NASA Test #GSC19998

© 2013 Glenair, Inc.

3.3.4 **Thermal Shock**. Unmated connectors shall withstand 5 cycles of thermal shock with a minimum temperature of -55° C and a maximum temperature of 125° C when tested in accordance with EIA-364-32, Condition I. Connectors shall not exhibit any detrimental damage or degradation of electrical performance.

3.3.5 **Humidity**. Wired, mated connectors shall be subjected to humidity conditioning in accordance with EIA-364-31, Test Condition A (excluding steps 7a and 7b). On completion of step 6 of the final cycle, connectors shall be removed from the chamber, unmated and surface moisture removed. Connectors shall pass a DWV test of 100 volts (rms 60 hertz ac). Within 1 to 2 hours after removal of surface moisture, connectors shall meet 1 megohm insulation resistance. Following 24 hour conditioning, connectors shall meet megohm insulation resistance.

3.3.6 **Vibration (sine)**. Connectors, when mated, wired in series and fixtured in accordance with MIL-DTL-32139, shall exhibit no change of resistance greater than 10 ohms, which lasts longer than 10 nanoseconds, in accordance with test procedure EIA-364-28. Connectors shall not be damaged and no loosening of parts shall occur. Peak level 20 g.

3.3.7 **Shock**. Connectors, when mated, wired in series and fixtured in accordance with MIL-DTL-32139, shall not exhibit any discontinuity longer than 10 nanoseconds when tested in accordance with EIA-364-87, which specifies a 100 milliampere maximum test current. Connectors shall not be damaged and no loosening of parts shall occur. Peak acceleration 100 g's.

3.3.8 **Marking Permanency**. Connector marking shall meet the requirements of MIL-STD-202 Method 215.

3.3.9 **Fungus Resistance**. Materials used in the construction of these connectors shall be fungus inert in accordance with ASTM G21.

© 2013 Glenair, Inc.

GLENAIR, INC. • 1211 AIR WAY • GLENDALE, CA 91201-2497 • 818-247-6000 • FAX 818-500-9912
www.glenair.com E-Mail: sales@glenair.com

Glenair®

Series 89 Nanominiature Connectors
Mod Code 429 Space Grade Information

Save Time and Trouble with Mod Code 429 Space Grade Nanominiature Connectors

M32139 Class S Nanominiature connectors are DSCC approved for space programs. NASA EEE-INST-002 provides guidance on additional screening for Nano connectors. Glenair Mod Code 429 upgrades inspection and screening to NASA requirements without the need for a customer Statement of Work or Specification Control Drawing. This section explains Glenair Mod Code 429 ordering, and provides valuable information on outgassing and other space flight topics.

Six things you should know about Nano connectors for space flight:

1 Outgassing: What is outgassing, why is it important, and how does it affect connector selection? Is special processing required to meet outgassing requirements?

2 Screening: What is NASA screening and what level of screening is required?

3 Magnetic Permeability: Are nonmagnetic connectors required?

4 Cryogenic Exposure: Are Nano connectors suitable for -200° C. exposure?

5 Materials: Nano connectors offer a variety of materials and plating finishes. Which ones are recommended for space flight?

6 Wire Corrosion: M22759/33 irradiated Tefzel® wire is preferred for space applications. What about corrosion problems caused by this wire?

How To Order Space Grade Nano Connectors

Step 1: Find a Standard Nano Part Number
Titanium shells, nickel-plated aluminum shells and stainless steel shells are suitable for use in vacuum environments. Cadmium plating is prohibited for space flight.

Step 2: Select a NASA Screening Level
The term "Screening Level" refers to the final inspection procedure.
Level 1 for mission-critical highest reliability
Level 2 for high reliability
Level 3 for standard reliability

Step 3: Outgassing Processing
Glenair Nano connectors are certified to meet NASA outgassing requirements without special processing. However, if additional outgassing processing is required, choose the appropriate suffix code from the table below.

Step 4: Select the Mod Code 429 that Matches the Desired Level of Screening and Outgassing
Use the following table to choose the right Mod code. Add the Mod Code to the connector part number.
Example: 891-002-9ST-0A1-12J-429

NASA Screening Level	Special Screening Only	Special Screening Plus Outgassing Processing	
		48 Hour Oven Bake 175C.	Thermal Vacuum Outgassing
Level 1 Highest Reliability	Mod 429B	Mod 429J	Mod 429C
Level 2 High Reliability	Mod 429	Mod 429K	Mod 429A
Level 3 Standard Reliability	(Use standard part number)	Mod 186	Mod 186M

Dimensions in inches (millimeters) and are subject to change without notice.

© 2013 Glenair, Inc.

GLENAIR, INC. • 1211 AIR WAY • GLENDALE, CA 91201-2497 • 818-247-6000 • FAX 818-500-9912
www.glenair.com E-Mail: sales@glenair.com

Series 89 Nanominiature Connectors
Mod Code 429 Space Grade Information

1 Outgassing: What is outgassing and how does it affect connector selection? Is special processing required to meet outgassing requirements?

What is Outgassing?

Plastic and rubber materials give off gaseous molecules. For example, the smell inside a new car is caused by polymer outgassing. Heat and vacuum increase the rate of diffusion. In a spacecraft the gases coming off polymers can contaminate optical surfaces and instruments. The result is degraded performance.

How is Outgassing Measured?

The space industry has adopted a standardized test procedure, ASTM E 595, to evaluate out-gassing properties of polymers. Small samples of material are heated to 125° C. at a vacuum of 5 X 10-5 torr for 24 hours. Then the sample is weighed to calculate the Total Mass Loss (TML). The TML cannot exceed 1.00% of the total initial mass. During the test, outgassed matter condenses on a cooled collector plate. The quantity of outgassed matter is calculated to determine the Collected Volatile Condensable Material (CVCM). The CVCM cannot exceed 0.10% of the original specimen mass.

Do Nano Connectors Require Special Outgassing Processing?

No. Nano connectors meet NASA outgassing requirements without special processing.

2 Screening: What is NASA screening and what level of screening is required? **What is NASA Screening?**

NASA specification EEE-INST-002 provides instructions on selecting, screening and qualifying parts for use on NASA GSFC space flight projects. Table 2J in the NASA spec contains specific inspection instructions for Nanominiature connectors. These screening requirements exceed the standard mil spec inspection levels.

What Screening Level is Required for Space Applications?

NASA defines three levels of screening: level 1 for highest reliability, level 2 for high reliability, and level 3 for standard reliability.

Is Glenair NASA Certified?

Yes. Meeting NASA requirements means not only inspecting per EEE-INST-002, but also building parts in accordance with NASA Technical Standard NASA-STD-8739.4 "Crimping, Interconnecting Cables, Harnesses, and Wiring". Glenair fully meets these requirements and has obtained NASA certification. Our extra inspection steps reflect the fact that pre-wired connectors not only require best practices on the assembly floor, but also require thorough final electrical and mechanical testing. For more information on Glenair's NASA qualifications and certifications, please contact our Micro-D and Nanominiature connector product manager.

Screening Requirements

Inspection/ Test	Glenair Level 1 (Mod 429B)	Glenair Level 2 (Mod 429)
Visual Inspection	100% (10X)	100%
Mechanical	100%	2 pcs.
Voltage (DWV)	100%	100%
Insulation Resistance	100%	100%
Low Level Contact Resistance	100% (Read and Record)	2 pcs. (Read and Record)
Mating Force	2 pcs.	N/A
Contact/Wire Retention	2 pcs.	N/A
Solderability/Resistance to Soldering Heat	2 pcs.	N/A

Dimensions in inches (millimeters) and are subject to change without notice.

© 2013 Glenair, Inc.

GLENAIR, INC. • 1211 AIR WAY • GLENDALE, CA 91201-2497 • 818-247-6000 • FAX 818-500-9912
www.glenair.com E-Mail: sales@glenair.com

Series 89 Nanominiature Connectors
Mod Code 429 Space Grade Information

3 Magnetic Permeability: Are nonmagnetic connectors required?

Spacecraft designers generally avoid the use of ferromagnetic materials, which can become magnetized and can interfere with sensitive instruments. Nano connectors have a maximum permeability of 2 mu.

4 Cryogenic Exposure: Are Nano connectors suitable for use at temperatures approaching -200° C. ?Nano connectors are rated to -55° C. Glenair has not performed testing below this temperature. EEE-INST-002 states "...experience has proven it is possible for (non-certified) connector types to be used successfully at cryogenic temperatures. It is recommended that connector samples should be subjected to five cycles of cryogenic temperature...(followed by examination for cracks and DWV)".

5 Materials: Which materials are recommended for space flight?

Cadmium plated shells are prohibited from space programs. Other Nano materials are acceptable.

6 Wire Corrosion: M22759/33 irradiated Tefzel® wire is preferred for space applications. What about corrosion problems caused by this wire?

Does M22759/33 Wire Have an Outgassing Problem?

Irradiated Tefzel® wire is known to cause tarnishing and corrosion of metal parts in close proximity, usually in sealed bags. Both MIL-DTL-32139 and NASA EEE-INST-002 contain cautionary notes regarding this problem. Wire manufacturers have not been able to eliminate this problem. This corrosion problem is referred to as "wire outgassing", which has led to confusion over the term outgassing. This problem has nothing to do with the ability of the wire to meet the TML and CVCM outgassing requirements of ASTM E595. M22759/33 irradiated Tefzel wire continues to be the wire of choice for spacecraft. This wire complies with outgassing requirements.

Nano connectors with M22759/33 wire should not be stored in sealed bags for extended periods.

New Unit Pack Minimizes Corrosion

Glenair has adopted an inovative new packaging system to protect the connector from performance hindering corrosion. Metal shell connectors supplied wtih M22759/33 wire are now packaged as follows: the connector is wrapped in Teflon® tape and placed in a ventilated sulpher-free paper envelope to ensure that your mission-critical component arrives in perfect order.

Outgassing Properties of Nano Connectors

Component	Material	Brand Name	% Total Mass Loss	% Collected Volatile Condensable Material	Test Report
Thermoplastic Insulators and PCB Trays	Liquid Crystal Polymer	Vectra® C-130	0.03	0.00	NASA Test #GSC17478
Potting Compound	Epoxy	Hysol C9-4215	0.48	0.01	Glenair Test
Wire	Tefzel®	Tefzel®	0.22	0.01	NASA Test #GSC19998

Dimensions in inches (millimeters) and are subject to change without notice.

© 2013 Glenair, Inc.

GLENAIR, INC. • 1211 AIR WAY • GLENDALE, CA 91201-2497 • 818-247-6000 • FAX 818-500-9912
www.glenair.com E-Mail: sales@glenair.com

Upgrade to 200° Celcius with Mod Code 534 High-Temperature Epoxy

The search for oil and gas has led to deeper reservoirs where extreme temperatures and pressures test the limits of electronics design. Oil well logging instruments must be able to withstand temperatures beyond the limits of standard connectors.

Nano connectors are made from temperature-resistant materials. The polyphenylene Sulfide (PPS) glass-filled thermoplastic insulators easily withstand 200° C. The TwistPin contacts and aluminum shells also are rated for continuous exposure to 200° C. The epoxy potting compound is the only component not rated for high-temperature. Mod Code 534 upgrades the standard epoxy with a special 315° C. epoxy.

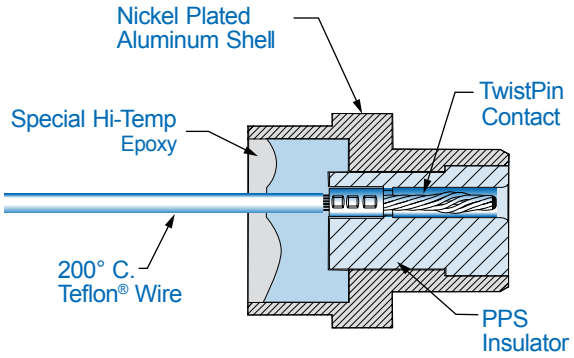

Plug

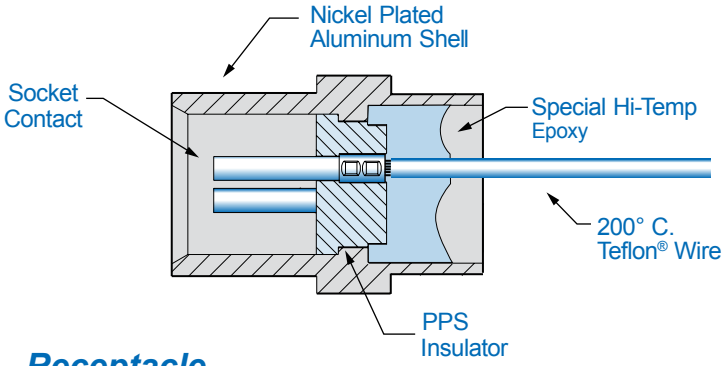

Receptacle

How to Order Nano Connectors with Mod Code 534 Hi Temp	
Step 1: Find a standard Nano part number. Mod 534 is available on all standard metal shell Nanominiature connectors, including pre-wired and printed circuit board versions.	Example: 891-001-25PA2-0B7-12J 1. Metal shell only 2. Nickel-plated aluminum or stainless steel shells only.
Step 2: Add the Mod Code to the Part Number	Example: 891-001-25PA2-0B7-12J-534

Notes

Shell Material & Finish:
Electroless nickel plated aluminum is commonly used for high-temperature connectors. Cadmium plated aluminum is not recommended for temperatures exceeding 175° C. because of discoloration and breakdown of the chromate seal applied to the cadmium. Stainless steel shells provide the best resistance to temperature and corrosive environments, but at the expense of weight and cost.

Potting Conmpound:
315° C. Rated Epoxy

Dimensions in inches (millimeters) and are subject to change without notice.

© 2013 Glenair, Inc.

GLENAIR, INC. • 1211 AIR WAY • GLENDALE, CA 91201-2497 • 818-247-6000 • FAX 818-500-9912
www.glenair.com E-Mail: sales@glenair.com

Glenair®

RoHS Compliance Information

TwistPin Connectors and RoHS Compliance

European Union Directive 2002/95/EC on Restriction of the use of certain Hazardous Substances ("RoHS") states that certain types of equipment (primarily consumer electronic products such as personal computers) shall not contain lead, mercury, cadmium, hexavalent chromium, PBB's or PBDE's. For the record, Glenair does not produce any OEM products of this type. Furthermore, our interconnect components are either free of the substances RoHS controls, or specifically intended for use in military-aerospace applications that are exempt. Makers of consumer products should refer to the following guidelines to insure Glenair interconnect components are correctly specified when used in in RoHS regulated electronic equipment.

Are Nano Connectors RoHS compliant?

The products in this catalog can be ordered with various plating finishes. Some finishes such as cadmium along with solder-dipping, do not comply with the RoHS directive.

Why doesn't Glenair eliminate non-RoHS products?

Glenair products are typically used in defense and aerospace equipment exempt from RoHS requirements. Glenair will continue to offer cadmium and chromate finishes in accordance with DoD and aerospace specifications. Our part numbers contain a broad range of plating finish ordering codes. Customers can easily specify RoHS compliant finishes if desired.

Products that do not comply with RoHS regulations:

1 Cadmium plating is available on metal shell connectors in this catalog. Note that cadmium plating does not currently comply with RoHS rules.

2 Tin-lead solder dipped printed circuit board tails. Board mount M32139 Nanos and other products are normally solder dipped in 63% tin 37% lead molton solder. RoHS compliance for consumer products requires elimination of solder coatings containing lead.

RoHS compliance made easy

1 Specify electroless nickel plating on the connector shell. Or, choose stainless steel shells for maximum corrosion protection and RoHS compliance.

2 Use Mod Code 513 on Nano board mount connectors. Board mount Nanominiature's and other products are normally solder dipped in 63% tin 37% lead molton solder. Any solder-dipped part can be supplied with RoHS compliant gold-plating instead simply by adding Mod Code 513 as a suffix to the standard part number.

Nano ROHS Compliance Examples

Part Number	Problem	Solution	RoHS Compliant Part Number
891-001-25PA1-125	Plating code A1 specifies cadmium plating.	Change to electroless nickel plating (code 2).	891-001-25PA2-12J
891-008-25PA2-BRTIT	PCB connectors are solder-dipped in tin-lead.	Add Mod Code 513 to change the PC tail finish to gold plating.	891-008-25PA2-BRTIT-513
891-008-25PA1-BRTIT	Cadmium plated shell and solder-dipped contacts.	Change to nickel plating and gold contacts	891-008-25PA2-BRTIT-513

Dimensions in inches (millimeters) and are subject to change without notice.

© 2013 Glenair, Inc.

GLENAIR, INC. • 1211 AIR WAY • GLENDALE, CA 91201-2497 • 818-247-6000 • FAX 818-500-9912
www.glenair.com E-Mail: sales@glenair.com

Series 89 Plating Codes and Anti-Static Dust Caps

Nano Connector Plating Codes: ROHS Compliance			
Nano Plating Code	Plating Type	RoHS Compliance	Notes
A1	Cadmium with yellow chromate conversion coating over electroless nickel	No	Electroless nickel is the preferred alternate.
A2	Electroless nickel	RoHS COMPLIANT	First choice for RoHS compliance. Good corrosion resistance, excellent conductivity, M32139 approved, always in stock.
S	Stainless steel shell, passivated	RoHS COMPLIANT	Higher cost but unsurpassed corrosion resistance, not conductive enough for typical EMI needs. Build-to-order.
T	Titanium, unplated	RoHS COMPLIANT	Higher cost but unsurpassed corrosion resistance, not conductive enough for typical EMI needs. Build-to-order.

Anti-Static Dust Caps

Anti-Static Dust Caps offer protection to Nano connectors for storage and handling. Molded in black thermoplastic LDPE, these caps meet the anti-static decay rate specified in MIL-PRF-81705D. **UL 94-V0** rated, self-extinguishing

890 and 891 Metal Shells				890 and 891 Metal Shells			
		A Ref.				A Ref.	
Part Number	Layout	In.	mm.	Part Number	Layout	In.	mm.
000-01-05-174	5P	.215	5.461	000-01-09-177	9S	.406	10.312
000-01-09-174	9P	.315	8.001	000-01-15-177	15S	.481	12.217
000-01-15-174	15P	.465	11.811	000-01-21-177	21S	.556	14.122
000-01-21-174	21P	.615	15.621	000-01-25-177	25S	.606	15.392
000-01-25-174	25P	.715	18.161	000-01-31-177	31S	.681	17.297
000-01-31-174	31P	.865	21.971	000-01-37-177	37S	.756	19.202
000-01-37-174	37P	1.015	25.781	000-01-51-177	51S	.931	23.647
000-01-51-174	51P	1.365	34.671	000-01-65-177	65S	1.106	28.092
000-01-05-175	5S	.431	10.947	000-01-69-177	69S	1.156	29.362
000-01-09-175	9S	.531	13.487	000-01-85-177	85S	1.408	35.763
000-01-15-175	15S	.681	17.297				
000-01-21-175	21S	.831	21.107				
000-01-25-175	25S	.931	23.647				
000-01-31-175	31S	1.081	27.457				
000-01-37-175	37S	1.231	31.267				
000-01-51-175	51S	1.581	40.157				
000-01-09-176	9P	.191	4.851				
000-01-15-176	15P	.266	6.756				
000-01-21-176	21P	.341	8.661				
000-01-25-176	25P	.391	9.931				
000-01-31-176	31P	.466	11.836				
000-01-37-176	37P	.541	13.741				
000-01-51-176	51P	.716	18.186				
000-01-65-176	65P	.891	22.631				
000-01-69-176	69P	.941	23.901				
000-01-85-176	85P	1.141	28.981				

000-01-00-174

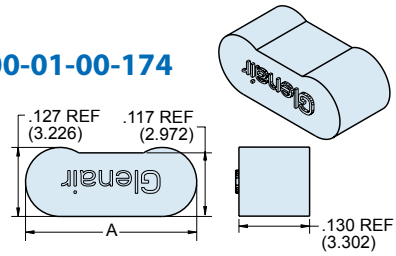

000-01-00-175

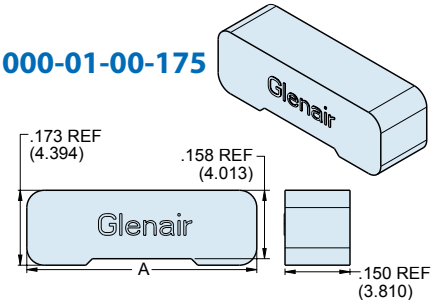

000-01-00-177

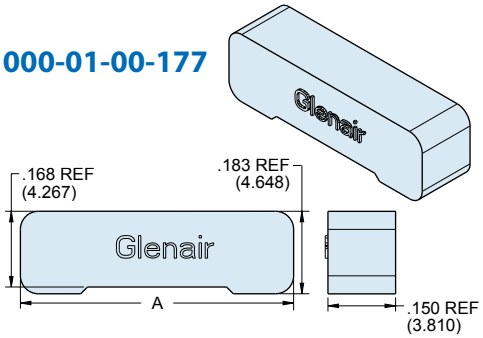

000-01-00-176

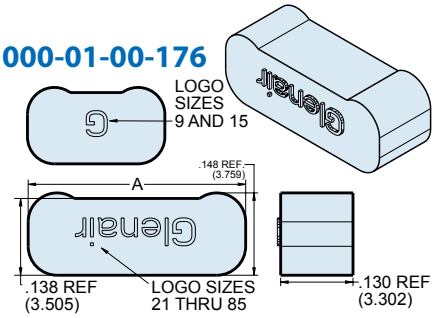

Dimensions in inches (millimeters) and are subject to change without notice.

Series 89 Nanominiature Connectors
Single Row Contact Arrangements

Single Row Mating Face of Pin (Plug) Connector

Single Row Mating Face of Socket (Receptacle) Connector

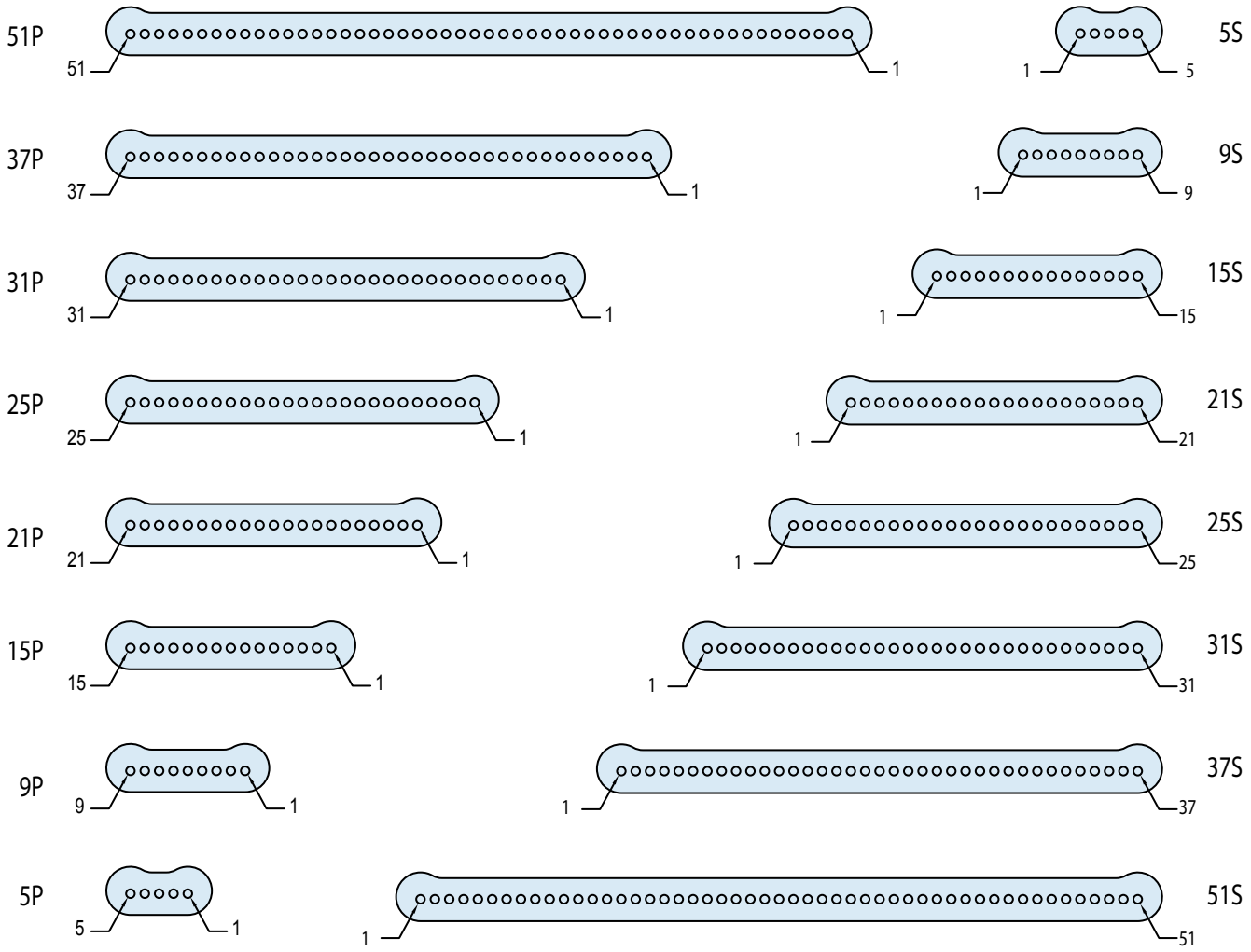

Dimensions in inches (millimeters) and are subject to change without notice.

© 2013 Glenair, Inc.

GLENAIR, INC. • 1211 AIR WAY • GLENDALE, CA 91201-2497 • 818-247-6000 • FAX 818-500-9912
www.glenair.com E-Mail: sales@glenair.com

Series 89 Nanominiature Connectors
Double Row Contact Arrangements

Double Row Mating Face of Pin (Plug) Connector

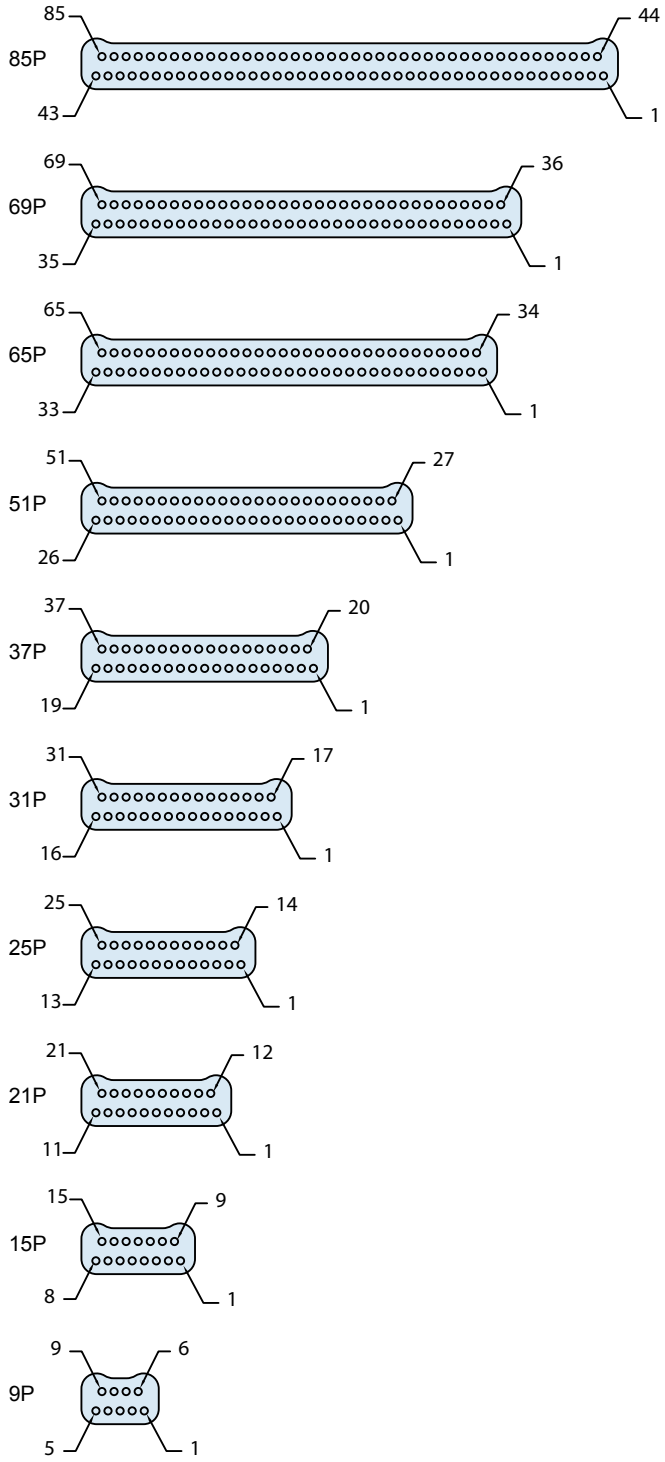

Double Row Mating Face of Socket (Receptacle) Connector

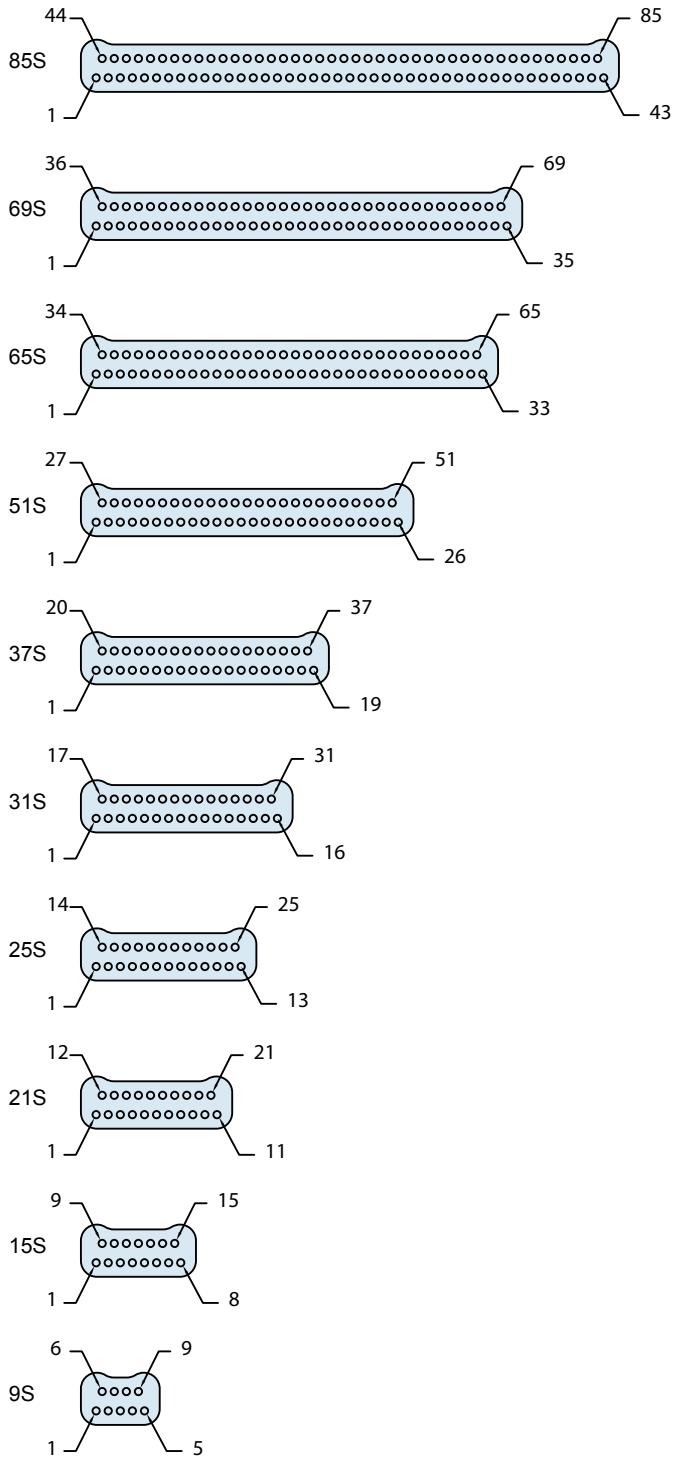

Dimensions in inches (millimeters) and are subject to change without notice.

© 2013 Glenair, Inc.

GLENAIR, INC. • 1211 AIR WAY • GLENDALE, CA 91201-2497 • 818-247-6000 • FAX 818-500-9912
www.glenair.com E-Mail: sales@glenair.com

Series 89 Nanominiature Circular Connector Shell Size/Contact Arrangements and Keyway Positions

Circular Plug Mating Face Views		
Size 1-4, 4 Contacts	Size 1-7, 7 Contacts	Size 2-19, 19 Contacts
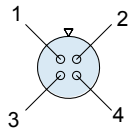	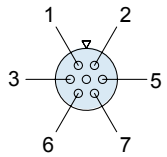	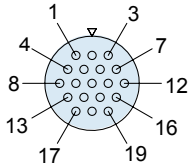
Size 3-37, 37 Contacts	Size 4-44, 44 Contacts	Size 4-55, 55 Contacts
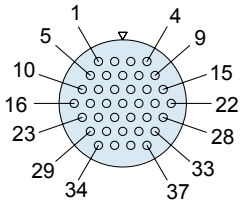	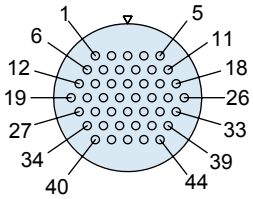	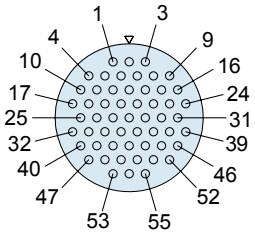

Position identification's are for reference only, and do not exist on actual connector

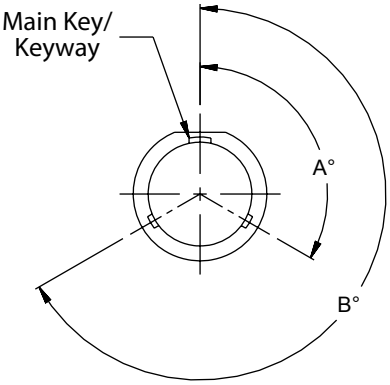

Key Positions			
Size	Polarization	A°	B°
1-4	N	150	210
	A	75	210
1-7	N	95	230
	A	140	275
2-19	N	150	210
	A	75	210
3-37	N	150	210
	A	75	210
4-44	N	150	210
	A	75	210
4-55	N	95	230
	A	140	275

Dimensions in inches (millimeters) and are subject to change without notice.

© 2013 Glenair, Inc.

GLENAIR, INC. • 1211 AIR WAY • GLENDALE, CA 91201-2497 • 818-247-6000 • FAX 818-500-9912
www.glenair.com E-Mail: sales@glenair.com

Series 89 Nanominiature Circular Connector Shell Size/Contact Arrangements and Keyway Positions

Circular Receptacle Mating Face Views		
Size 1-4, 4 Contacts	Size 1-7, 7 Contacts	Size 2-19, 19 Contacts
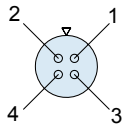	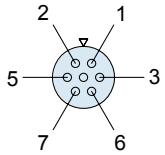	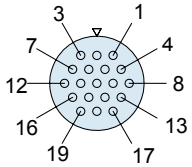
Size 3-37, 37 Contacts	Size 4-44, 44 Contacts	Size 4-55, 55 Contacts
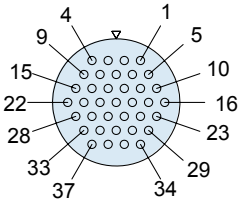	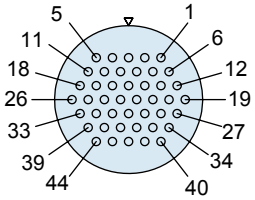	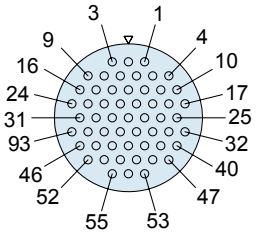

Position identification's are for reference only, and do not exist on actual connector

Key Positions			
Size	Polarization	A°	B°
1-4	N	150	210
	A	75	210
1-7	N	95	230
	A	140	275
2-19	N	150	210
	A	75	210
3-37	N	150	210
	A	75	210
4-44	N	150	210
	A	75	210
4-55	N	95	230
	A	140	275

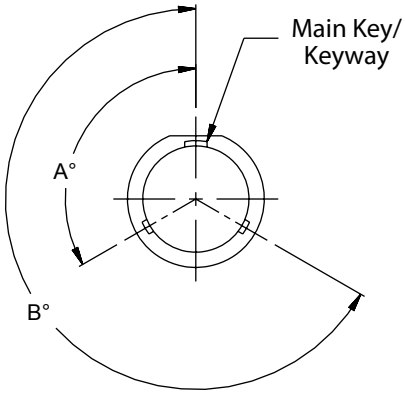

Dimensions in inches (millimeters) and are subject to change without notice.

© 2013 Glenair, Inc.

GLENAIR, INC. • 1211 AIR WAY • GLENDALE, CA 91201-2497 • 818-247-6000 • FAX 818-500-9912
www.glenair.com E-Mail: sales@glenair.com

Glenair Protective Dust Covers.

Protect your connectors during shipping and storage with our plastic connector covers. These lightweight covers protect susceptible mating interfaces to insure a working product.

Glenair, Inc
1211 Air Way
Glendale, California
91201-2497

For more information contact the factory at 818.247.6000

892-000
Circular Breakaway, Front Panel Mount Receptacle Connector with Insulated Wire

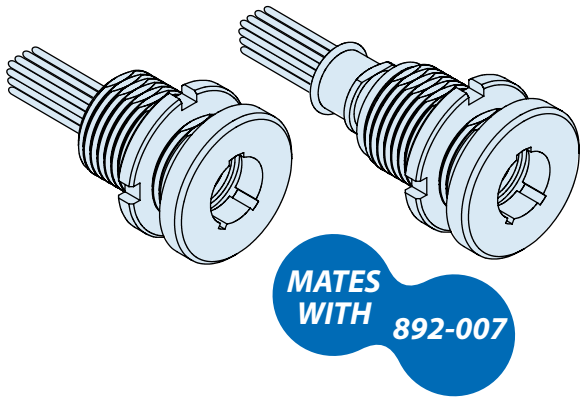

Glenair Front Panel Mount Breakaway Receptacle Connectors feature gold alloy TwistPin contacts, offering premium performance and reliability for demanding applications. Available with or without backshell, overmolded or shrink boot.

Choose Aluminum or Stainless Steel Shells in 6 layouts from 4 to 55 contacts. These connectors are intermateable with nanominiature plug connectors 892-007.

How To Order Circular Nano Connectors

Sample Part Number	892	-000	-02	1-7	N	A2	-0	A	7	-12

Series	**892** - Nano Circular with Insulated Wire
Shell Style	**000** - Front Panel Mount Breakaway Receptacle
Accessory	**01** - No Backshell **02** - With Backshell **03** - Overmolded **04** - Shrink Boot
Shell Size/ Contact Arrangement	**1-4** - Shell Size 1 with 4 contacts **3-37** - Shell Size 3 with 37 contacts **1-7** - Shell Size 1 with 7 contacts **4-44** - Shell Size 4 with 44 contacts **2-19** - Shell Size 2 wih 19 contacts **4-55** - Shell Size 4 with 55 contacts *See Table I*
Polarization	**N** - Normal **A** - Alternate
Shell Material/Finish	**A2** - Aluminum/Electroless Nickel **S1** - Stainless Steel/Zinc Cobalt (Black) **A5** - Aluminum/Gold Over Nickel **S2** - Stainless Steel/Passivated
Wire Gauge	**0** - 30 AWG **2** - 32 AWG
Wire Type	**A** - Ultralightweight XLETFE Insulation, Silver Coated Ultrahigh Strength Copper (Not Available in #32 AWG) **B** - Extruded PTFE Insulation, Silver-Coated Copper NEMA HP3-ETX (MIL-W-16878/6) **C** - Cross Linked Modified ETFE Insulation, Silver Coated High Strength Copper. MIL-W-22759/33 (not available in #32 AWG)
Wire Color	**1** - White **2** - Yellow **7** - 10 Color Repeating (Wire Type **A** Is Striped, Types **B** and **C** Are Solid Colors)
Wire Length (Inches)	**12** = 12.00 + 1.00 Inches

Table I: 892 Circular Receptacle Mating Face Views

Size 1-4 4 Contacts	Size 1-7 7 Contacts	Size 2-19 19 Contacts	Size 3-37 37 Contacts	Size 4-44 44 Contacts	Size 4-55 55 Contacts
	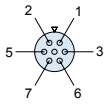	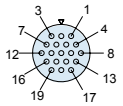	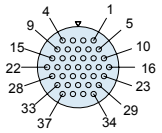	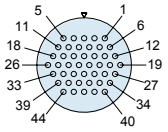	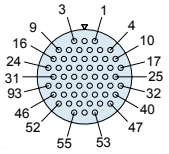

Dimensions in inches (millimeters) and are subject to change without notice.

© 2013 Glenair, Inc.

GLENAIR, INC. • 1211 AIR WAY • GLENDALE, CA 91201-2497 • 818-247-6000 • FAX 818-500-9912
www.glenair.com E-Mail: sales@glenair.com

892-000
Circular Breakaway, Front Panel Mount Receptacle Connector with Insulated Wire

Table II: Dimensions

892-000-01 Without Termination Platform | 892-000-02 With Termination Platform

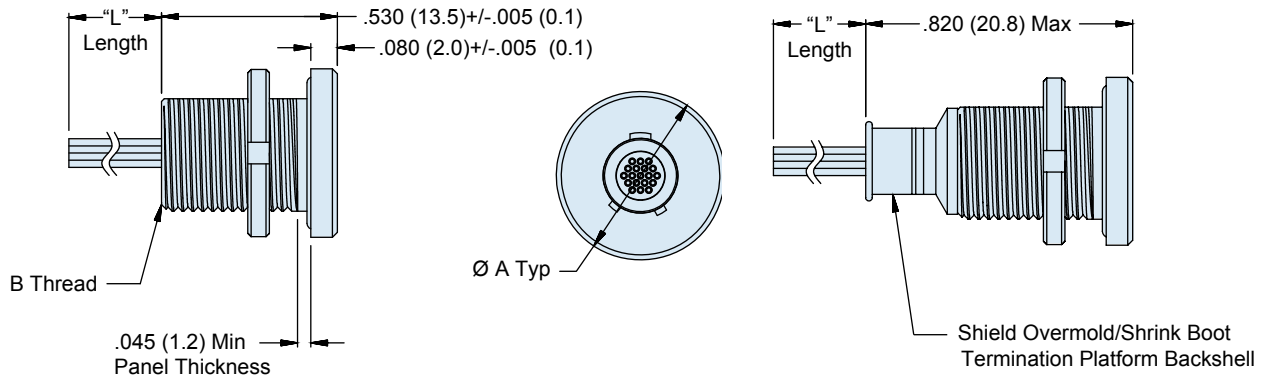

Size	Ø A +/-.005	B Thread
1-4	.489 (12.5)	M8.5 X 0.75-6g
1-7	.489 (12.5)	M8.5 X 0.75-6g
2-19	.528 (13.5)	M9.5 X 0.75-6g
3-37	.567 (14.5)	M10.5 X 0.75-6g
4-44	.627 (16.0)	M12.0 X 0.75-6g
4-55	.627 (16.0)	M12.0 X 0.75-6g

Table III: Front Panel Mount Panel Cut-Out

Size	C +.002 / -.001	ØD +.002 / -.001
1-4	.320 (8.2)	.340 (8.1)
1-7	.320 (8.2)	.340 (8.1)
2-19	.359 (9.2)	.380 (9.2)
3-37	.399 (10.2)	.420 (10.7)
4-44	.457 (11.7)	.479 (12.2)
4-55	.457 (11.7)	.457 (12.2)

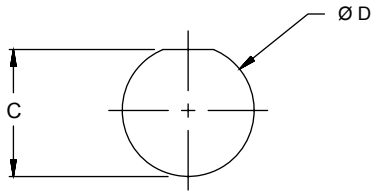

Material/finish:

- Shell/spanner nut/backshell - see part number breakdown
- Insulator - LCP/na
- Socket contacts - gold alloy
- O-rings - fluorosilicone/na
- Internal latching spring - stainless steel/gold plate

Dimensions in inches (millimeters) and are subject to change without notice.

© 2013 Glenair, Inc.

GLENAIR, INC. • 1211 AIR WAY • GLENDALE, CA 91201-2497 • 818-247-6000 • FAX 818-500-9912
www.glenair.com E-Mail: sales@glenair.com

892-001
Circular Threaded, Front Panel Mount Receptacle Connector with Insulated Wire

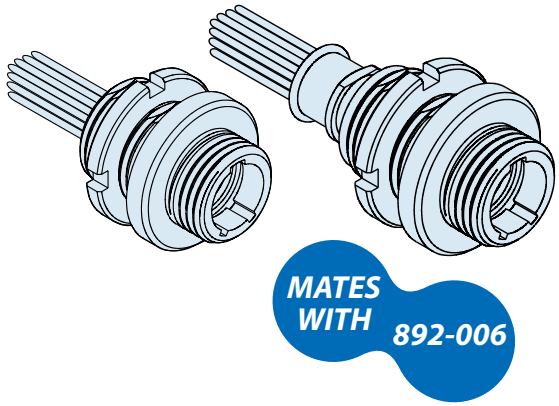

Glenair Front Panel Mount Threaded Coupling Receptacle Connectors feature gold alloy TwistPin contacts, offering premium performance and reliability for demanding applications. Available with or without backshell, overmolded or shrink boot.

Choose Aluminum or Stainless Steel Shells in 6 layouts from 4 to 55 contacts. These connectors are intermateable with nanominiature plug connectors 892-006.

How To Order Circular Nano Connectors

Sample Part Number	892	-001	-02	1-7	N	A2	-0	A	7	-12

Series	**892** - Nano Circular with Insulated Wire
Shell Style	**001** - Front Panel Mount Threaded Coupling Receptacle
Accessory	**01** - No Backshell **02** - With Backshell **03** - Overmolded **04** - Shrink Boot
Shell Size/Contact Arrangement	**1-4** - Shell Size 1 with 4 contacts **1-7** - Shell Size 1 with 7 contacts **2-19** - Shell Size 2 wih 19 contacts **3-37** - Shell Size 3 with 37 contacts **4-44** - Shell Size 4 with 44 contacts **4-55** - Shell Size 4 with 55 contacts *See Table I*
Polarization	**N** - Normal **A** - Alternate
Shell Material/Finish	**A2** - Aluminum/Electroless Nickel **A5**- Aluminum/Gold Over Nickel **S1** - Stainless Steel/Zinc Cobalt (Black) **S2** - Stainless Steel/Passivated
Wire Gauge	**0** - 30 AWG **2** - 32 AWG
Wire Type	**A** - Ultralightweight XLETFE insulation, silver coated ultrahigh strength copper **B** - Extruded PTFE insulation, silver-coated copper NEMA HP3-ETX (MIL-W-16878/6) **C** - Cross linked modified ETFE insulation, silver coated high strength copper. MIL-W-22759/33 (not available in #32 AWG)
Wire Color	**1** - White **2** - Yellow **7** - 10 Color repeating (Wire type **A** is striped, types **B** and **C** are solid colors)
Wire Length (Inches)	**12** = 12.00 + 1.00 Inches

Table I: 892 Circular Receptacle Mating Face Views

Size 1-4 4 Contacts	Size 1-7 7 Contacts	Size 2-19 19 Contacts	Size 3-37 37 Contacts	Size 4-44 44 Contacts	Size 4-55 55 Contacts
	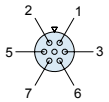	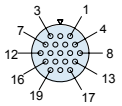	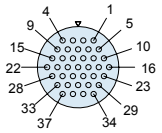	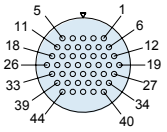	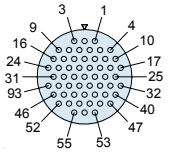

Dimensions in inches (millimeters) and are subject to change without notice.

© 2013 Glenair, Inc.

GLENAIR, INC. • 1211 AIR WAY • GLENDALE, CA 91201-2497 • 818-247-6000 • FAX 818-500-9912
www.glenair.com E-Mail: sales@glenair.com

892-001
Circular Threaded, Front Panel Mount Receptacle Connector with Insulated Wire

Table II: Dimensions

892-001-01 Without Termination Platform | 892-001-02 With Termination Platform

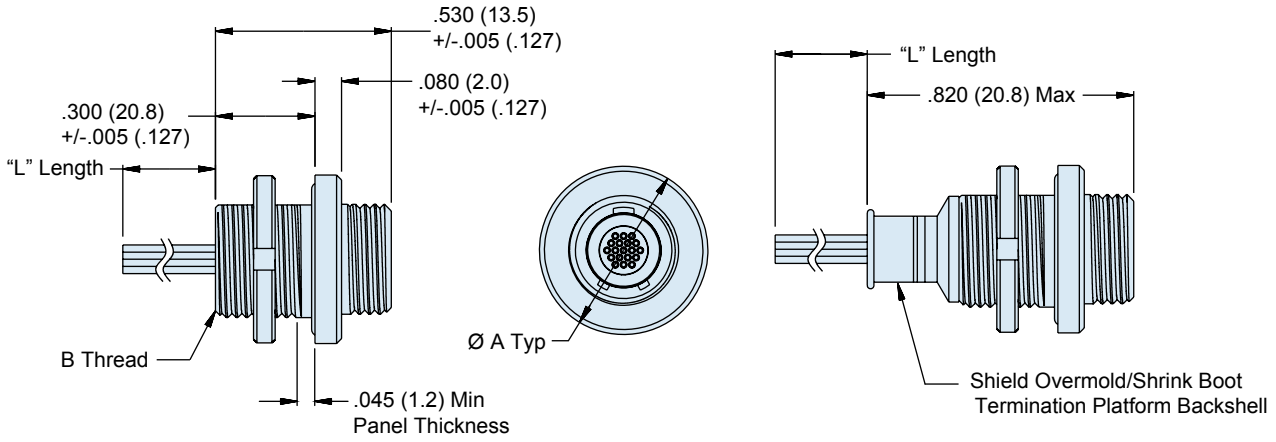

Size	Ø A +/-.005	B Thread
1-4	.489 (12.5)	M8.5 X 0.75-6g
1-7	.489 (12.5)	M8.5 X 0.75-6g
2-19	.528 (13.5)	M9.5 X 0.75-6g
3-37	.567 (14.5)	M10.5 X 0.75-6g
4-44	.627 (16.0)	M12.0 X 0.75-6g
4-55	.627 (16.0)	M12.0 X 0.75-6g

Table III: Front Panel Mount Panel Cut-Out

Size	C +.002 / -.001	ØD +.002 / -.001
1-4	.320 (8.2)	.340 (8.7)
1-7	.320 (8.2)	.340 (8.7)
2-19	.359 (9.2)	.380 (9.7)
3-37	.399 (10.2)	.420 (10.7)
4-44	.457 (11.7)	.479 (12.2)
4-55	.457 (11.7)	.479 (12.2)

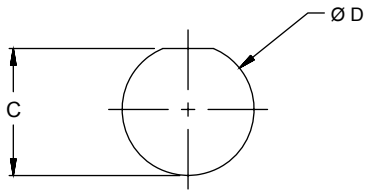

Material/finish:

- Shell/spanner nut/backshell - see part number breakdown
- Insulator - LCP/na
- Socket contacts - gold alloy
- O-rings - fluorosilicone/na
- Internal latching spring - stainless steel/gold plate

Dimensions in inches (millimeters) and are subject to change without notice.

© 2013 Glenair, Inc.

GLENAIR, INC. • 1211 AIR WAY • GLENDALE, CA 91201-2497 • 818-247-6000 • FAX 818-500-9912
www.glenair.com E-Mail: sales@glenair.com

892-002
Circular Breakaway, Rear Panel Mount Receptacle Connector with Insulated Wire

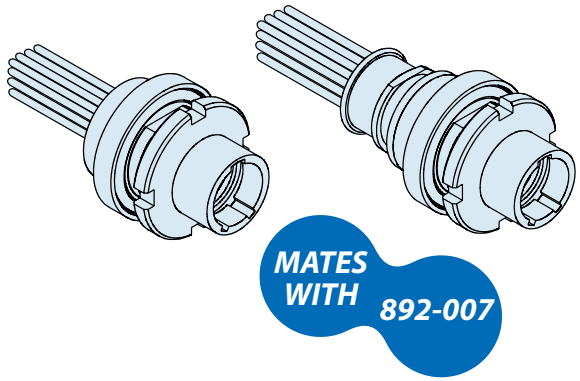

Glenair Rear Panel Mount Breakaway Receptacle Connectors feature gold alloy TwistPin contacts, offering premium performance and reliability for demanding applications. Available with or without backshell, overmolded or shrink boot.

Choose Aluminum or Stainless Steel Shells in 6 layouts from 4 to 55 contacts. These connectors are intermateable with nanominiature plug connectors 892-007.

How To Order Circular Nano Connectors

Sample Part Number	892	-002	-02	1-7	N	A2	-0	A	7	-12

Series	**892** - Nano Circular with Insulated Wire
Shell Style	**002** - Rear Panel Mount Breakaway Receptacle
Accessory	**01** - No Backshell **02** - With Backshell **03** - Overmolded **04** - Shrink Boot
Shell Size/Contact Arrangement	**1-4** - Shell Size 1 with 4 contacts **3-37** - Shell Size 3 with 37 contacts **1-7** - Shell Size 1 with 7 contacts **4-44** - Shell Size 4 with 44 contacts **2-19** - Shell Size 2 wih 19 contacts **4-55** - Shell Size 4 with 55 contacts *See Table I*
Polarization	**N** - Normal **A** - Alternate
Shell Material/Finish	**A2** - Aluminum/Electroless Nickel **S1** - Stainless Steel/Zinc Cobalt (Black) **A5**- Aluminum/Gold Over Nickel **S2** - Stainless Steel/Passivated
Wire Gauge	**0** - 30 AWG **2** - 32 AWG
Wire Type	**A** - Ultralightweight XLETFE Insulation, Silver Coated Ultrahigh Strength Copper **B** - Extruded PTFE Insulation, Silver-Coated Copper NEMA HP3-ETX (MIL-W-16878/6) **C** - Cross Linked Modified ETFE Insulation, Silver Coated High Strength Copper. MIL-W-22759/33 (Not Available In #32 AWG)
Wire Color	**1** - White **2** - Yellow **7** - 10 Color repeating (Wire type **A** is striped, types **B** and **C** are solid colors)
Wire Length (Inches)	**12** = 12.00 + 1.00 Inches

Table I: 892 Circular Receptacle Mating Face Views

Size 1-4 4 Contacts	Size 1-7 7 Contacts	Size 2-19 19 Contacts	Size 3-37 37 Contacts	Size 4-44 44 Contacts	Size 4-55 55 Contacts
	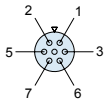	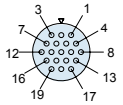	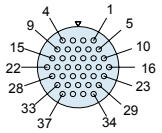	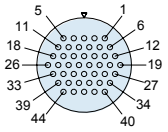	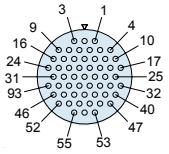

Dimensions in inches (millimeters) and are subject to change without notice.

© 2013 Glenair, Inc.

GLENAIR, INC. • 1211 AIR WAY • GLENDALE, CA 91201-2497 • 818-247-6000 • FAX 818-500-9912
www.glenair.com E-Mail: sales@glenair.com

892-002
Circular Breakaway, Rear Panel Mount Receptacle Connector with Insulated Wire

Table II: Dimensions

892-002-01 Without Termination Platform | 892-002-02 With Termination Platform

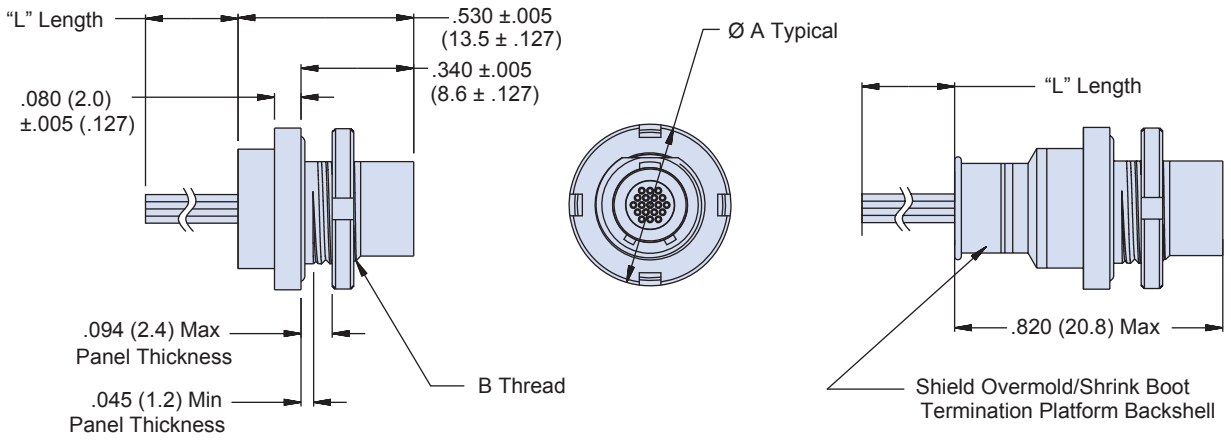

Size	Ø A +/-.005	B Thread
1-4	.429 (10.9)	M7.0 X 0.75-6g
1-7	.429 (10.9)	M7.0 X 0.75-6g
2-19	.488 (12.4)	M8.5 X 0.75-6g
3-37	.528 (13.4)	M9.5 X 0.75-6g
4-44	.567 (14.4)	M10.5 X 0.75-6g
4-55	.567 (14.4)	M10.5 X 0.75-6g

Table III: Rear Panel Mount Panel Cut-Out

Size	C +.002 / -.001	ØD +.002 / -.001
1-4	.260 (6.6)	.280 (7.1)
1-7	.260 (6.6)	.280 (7.1)
2-19	.318 (8.1)	.340 (8.6)
3-37	.361 (9.2)	.378 (9.6)
4-44	.401 (10.2)	.420 (10.7)
4-55	.401 (10.2)	.420 (10.7)

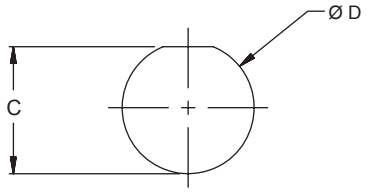

Material/finish:

- Shell/spanner nut/backshell - see part number breakdown
- Insulator - LCP/na
- Socket contacts - gold alloy
- O-rings - fluorosilicone/na
- Internal latching spring - stainless steel/gold plate

Dimensions in inches (millimeters) and are subject to change without notice.

© 2013 Glenair, Inc.

GLENAIR, INC. • 1211 AIR WAY • GLENDALE, CA 91201-2497 • 818-247-6000 • FAX 818-500-9912
www.glenair.com E-Mail: sales@glenair.com

892-003
Circular Threaded, Rear Panel Mount Receptacle Connector with Insulated Wire

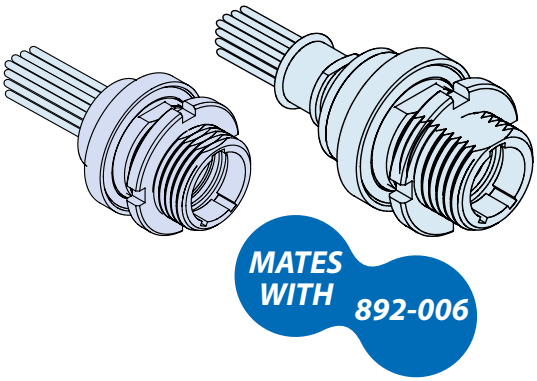

Glenair Rear Panel Mount Threaded Coupling Receptacle Connectors feature gold alloy TwistPin contacts, offering premium performance and reliability for demanding applications. Available with or without backshell, overmolded or shrink boot.

Pre-Tinned Insulated Wire are coated with Sn63Pb37 tin-lead for excellent solderability.

Choose Aluminum or Stainless Steel Shells in 6 layouts from 4 to 55 contacts. These connectors are intermateable with nanominiature plug connectors 892-006.

How To Order Circular Nano Connectors

Sample Part Number	892	-003	-02	1-7	N	A2	-0	A	7	-12

Series	**892** - Nano Circular with Insulated Wire
Shell Style	**003** - Rear Panel Mount Threaded Coupling Receptacle
Accessory	**01** - No Backshell **02** - With Backshell **03** - Overmolded **04** - Shrink Boot
Shell Size/Contact Arrangement	**1-4** - Shell Size 1 with 4 contacts **3-37** - Shell Size 3 with 37 contacts **1-7** - Shell Size 1 with 7 contacts **4-44** - Shell Size 4 with 44 contacts **2-19** - Shell Size 2 wih 19 contacts **4-55** - Shell Size 4 with 55 contacts *See Table I*
Polarization	**N** - Normal **A** - Alternate
Shell Material/Finish	**A2** - Aluminum/Electroless Nicke **S1** - Stainless Steel/Zinc Cobalt (Black) **A5**- Aluminum/Gold Over Nickel **S2** - Stainless Steel/Passivated
Wire Gauge	**0** - 30 AWG **2** - 32 AWG
Wire Type	**A** - Ultralightweight XLETFE insulation, silver coated ultrahigh strength copper **B** - Extruded PTFE insulation, silver-coated copper NEMA HP3-ETX (MIL-W-16878/6) **C** - Cross linked modified ETFE insulation, silver coated high strength copper. MIL-W-22759/33 (not available in #32 AWG)
Wire Color	**1** - White **2** - Yellow **7** - 10 Color repeating (Wire type **A** is striped, types **B** and **C** are solid colors)
Wire Length (Inches)	**12** = 12.00 + 1.00 Inches

Table I: 892 Circular Receptacle Mating Face Views

Size 1-4 4 Contacts	Size 1-7 7 Contacts	Size 2-19 19 Contacts	Size 3-37 37 Contacts	Size 4-44 44 Contacts	Size 4-55 55 Contacts
	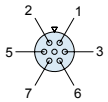	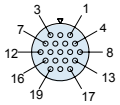	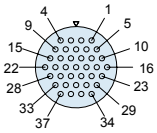	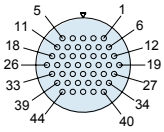	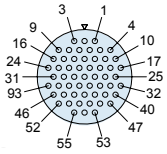

Dimensions in inches (millimeters) and are subject to change without notice.

© 2013 Glenair, Inc.

GLENAIR, INC. • 1211 AIR WAY • GLENDALE, CA 91201-2497 • 818-247-6000 • FAX 818-500-9912
www.glenair.com E-Mail: sales@glenair.com

892-003
Circular Threaded, Rear Panel Mount Receptacle Connector with Insulated Wire

Table II: Dimensions

892-003-01 Without Termination Platform | 892-003-02 With Termination Platform

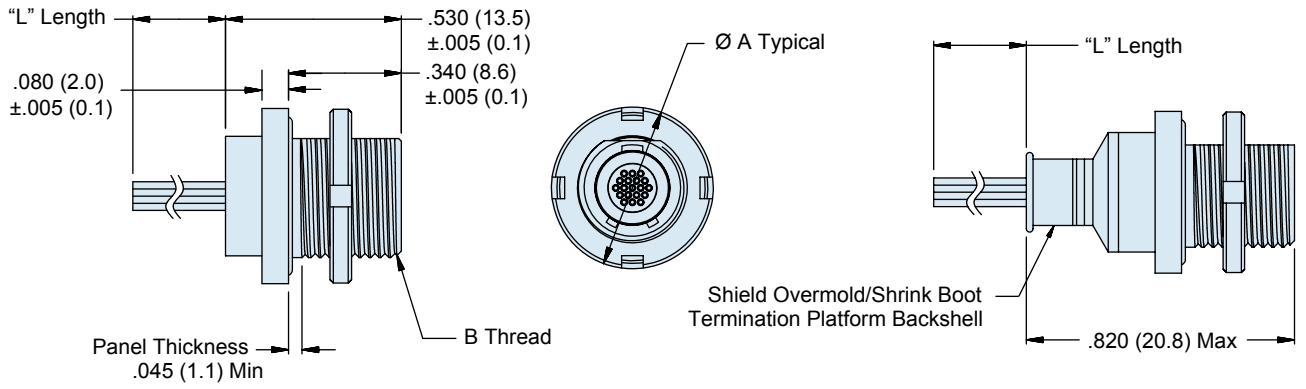

Size	Ø A +/-.005	B Thread
1-4	.429 (10.9)	M7.0 X 0.75-6g
1-7	.429 (10.9	M7.0 X 0.75-6g
2-19	.488 (12.4)	M8.5 X 0.75-6g
3-37	.528 (13.4)	M9.5 X 0.75-6g
4-44	.567 (14.5)	M10.5 X 0.75-6g
4-55	.567 (14.5)	M10.5 X 0.75-6g

Table III: Rear Panel Mount Panel Cut-Out

Size	C +.002 / -.001	ØD +.002 / -.001
1-4	.260 (6.6)	.280 (7.1)
1-7	.260 (6.6)	.280 (7.1)
2-19	.318 (8.1)	.340 (8.7)
3-37	.361 (9.2)	.378 (9.6)
4-44	.401 (10.2)	.420 (10.7)
4-55	.401 (10.2)	.420 (10.7)

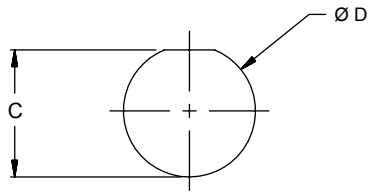

Material/finish:

- Shell/spanner nut/backshell - see part number breakdown
- Insulator - LCP/na
- Socket contacts - gold alloy
- O-rings - fluorosilicone/na
- Internal latching spring - stainless steel/gold plate

Dimensions in inches (millimeters) and are subject to change without notice.

© 2013 Glenair, Inc.

GLENAIR, INC. • 1211 AIR WAY • GLENDALE, CA 91201-2497 • 818-247-6000 • FAX 818-500-9912
www.glenair.com E-Mail: sales@glenair.com

892-004
Circular Breakaway, Inline Receptacle Connector with Insulated Wire

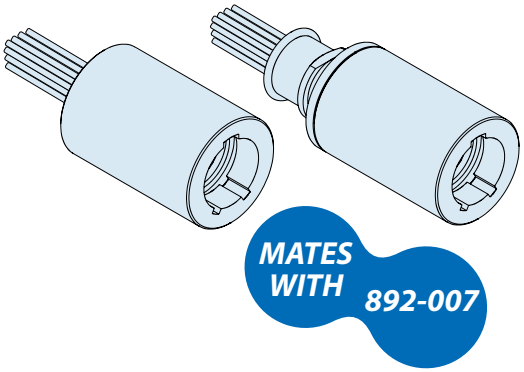

Glenair Inline Breakaway Receptacle Connectors feature gold alloy TwistPin contacts, offering premium performance and reliability for demanding applications. Available with or without backshell, overmolded or shrink boot.

Choose Aluminum or Stainless Steel Shells in 6 layouts from 4 to 55 contacts. These connectors are intermateable with nanominiature plug connectors 892-007.

How To Order Circular Nano Connectors

Sample Part Number	892	-004	-02	1-7	N	A2	-0	A	7	-12

Series	**892** - Nano Circular with Insulated Wire
Shell Style	**004** - In-Line Breakaway Receptacle
Accessory	**01** - No Backshell **02** - With Backshell **03** - Overmolded **04** - Shrink Boot
Shell Size/Contact Arrangement	**1-4** - Shell Size 1 with 4 contacts **1-7** - Shell Size 1 with 7 contacts **2-19** - Shell Size 2 wih 19 contacts **3-37** - Shell Size 3 with 37 contacts **4-44** - Shell Size 4 with 44 contacts **4-55** - Shell Size 4 with 55 contacts See Table I
Polarization	**N** - Normal **A** - Alternate
Shell Material/Finish	**A2** - Aluminum/Electroless Nickel **A5**- Aluminum/Gold Over Nickel **S1** - Stainless Steel/Zinc Cobalt (Black) **S2** - Stainless Steel/Passivated
Wire Gauge	**0** - 30 AWG **-2** - 32 AWG
Wire Type	**A** - Ultralightweight XLETFE insulation, silver coated ultrahigh strength copper **B** - Extruded PTFE insulation, silver-coated copper NEMA HP3-ETX (MIL-W-16878/6) **C** - Cross linked modified ETFE insulation, silver coated high strength copper. MIL-W-22759/33 (not available in #32 AWG)
Wire Color	**1** - White **2** - Yellow **7** - 10 Color repeating (Wire type **A** is striped, types **B** and **C** are solid colors)
Wire Length (Inches)	**12** = 12.00 + 1.00 Inches

Table I: 892 Circular Receptacle Mating Face Views

Size 1-4 4 Contacts	Size 1-7 7 Contacts	Size 2-19 19 Contacts	Size 3-37 37 Contacts	Size 4-44 44 Contacts	Size 4-55 55 Contacts
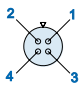	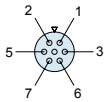	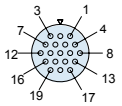	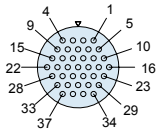	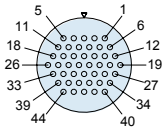	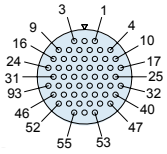

Dimensions in inches (millimeters) and are subject to change without notice.

© 2013 Glenair, Inc.

GLENAIR, INC. • 1211 AIR WAY • GLENDALE, CA 91201-2497 • 818-247-6000 • FAX 818-500-9912
www.glenair.com E-Mail: sales@glenair.com

892-004
Circular Breakaway, Inline Receptacle Connector with Insulated Wire

Table II: Dimensions

892-004-01 Without Termination Platform	892-004-02 With Termination Platform

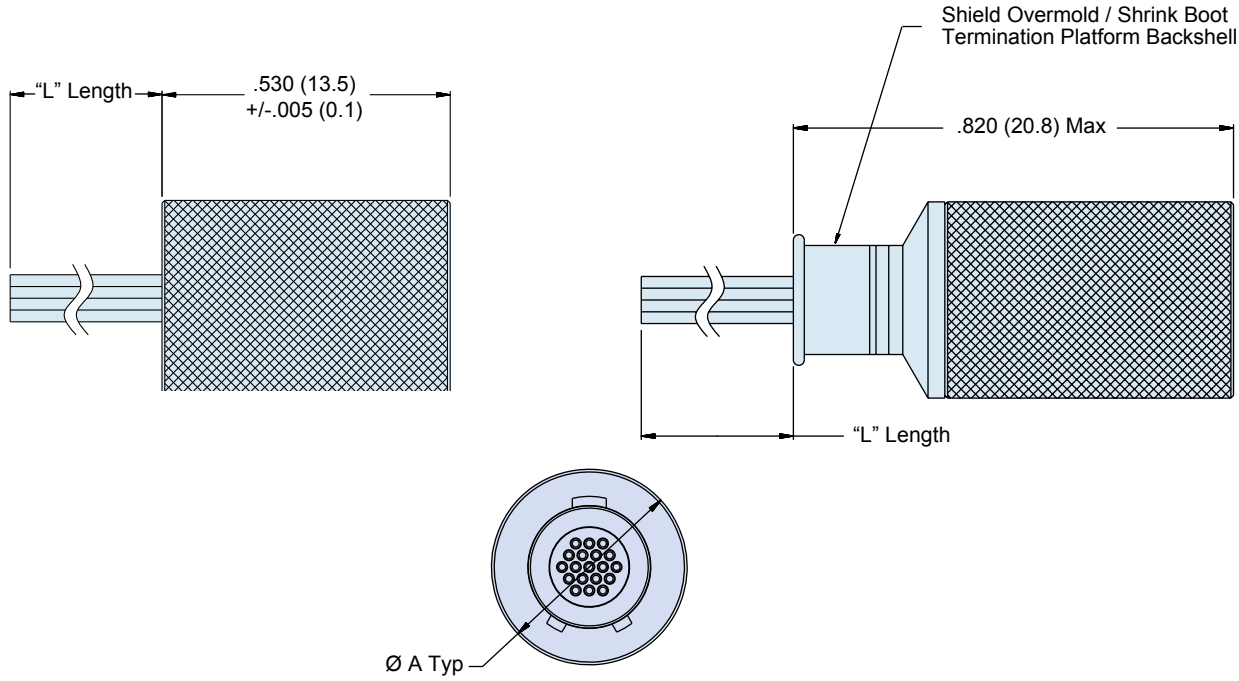

Size	Ø A +/-.005
1-4	.310 (7.9)
1-7	.310 (7.9)
2-19	.360 (9.1)
3-37	.411 (10.4)
4-44	.443 (11.3)
4-55	.443 (11.3)

Material/finish:

- Shell/spanner nut/backshell - see part number breakdown
- Insulator - LCP/na
- Socket contacts - gold alloy
- O-rings - fluorosilicone/na
- Internal latching spring - stainless steel/gold plate

Dimensions in inches (millimeters) and are subject to change without notice.

© 2013 Glenair, Inc.

GLENAIR, INC. • 1211 AIR WAY • GLENDALE, CA 91201-2497 • 818-247-6000 • FAX 818-500-9912
www.glenair.com E-Mail: sales@glenair.com

892-005
Circular Threaded, Inline Receptacle Connector with Insulated Wire

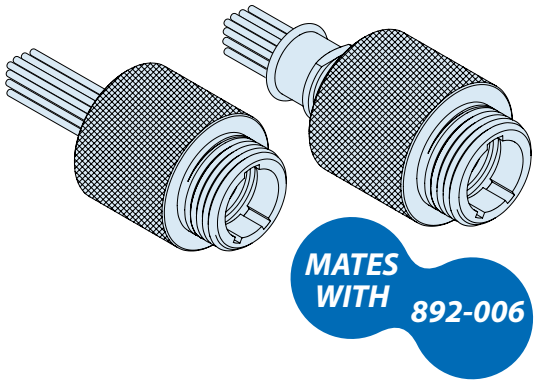

Glenair Inline Threaded Coupling Receptacle Connectors feature gold alloy TwistPin contacts, offering premium performance and reliability for demanding applications. Available with or without backshell, overmolded or shrink boot.

Choose Aluminum or Stainless Steel Shells in 6 layouts from 4 to 55 contacts. These connectors are intermateable with nanominiature plug connectors 892-006.

How To Order Circular Nano Connectors

Sample Part Number	892	-005	-02	1-7	N	A2	-0	A	7	-12

Series	**892** - Nano Circular With Insulated Wire
Shell Style	**005** - In-Line Threaded Coupling Receptacle
Accessory	**01** - No Backshell **02** - With Backshell **03** - Overmolded **04** - Shrink Boot
Shell Size/Contact Arrangement	**1-4** - Shell Size 1 with 4 contacts **3-37** - Shell Size 3 with 37 contacts **1-7** - Shell Size 1 with 7 contacts **4-44** - Shell Size 4 with 44 contacts **2-19** - Shell Size 2 wih 19 contacts **4-55** - Shell Size 4 with 55 contacts See Table I
Polarization	**N** - Normal **A** - Alternate
Shell Material/Finish	**A2** - Aluminum/Electroless Nickel **S1** - Stainless Steel/Zinc Cobalt (Black) **A5**- Aluminum/Gold Over Nickel **S2** - Stainless Steel/Passivated
Wire Gauge	**0** - 30 AWG **2** - 32 AWG
Wire Type	**A** - Ultralightweight XLETFE insulation, silver coated ultrahigh strength copper **B** - Extruded PTFE insulation, silver-coated copper NEMA HP3-ETX (MIL-W-16878/6) **C** - Cross linked modified ETFE insulation, silver coated high strength copper. MIL-W-22759/33 (not available in #32 AWG)
Wire Color	**1** - White **2** - Yellow **7** - 10 Color repeating (Wire type **A** is striped, types **B** and **C** are solid colors)
Wire Length (Inches)	**12** = 12.00 + 1.00 Inches

Table I: 892 Circular Receptacle Mating Face Views

Size 1-4 4 Contacts	Size 1-7 7 Contacts	Size 2-19 19 Contacts	Size 3-37 37 Contacts	Size 4-44 44 Contacts	Size 4-55 55 Contacts
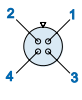	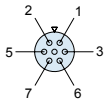	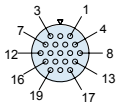	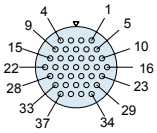	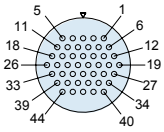	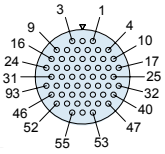

Dimensions in inches (millimeters) and are subject to change without notice.

© 2013 Glenair, Inc.

GLENAIR, INC. • 1211 AIR WAY • GLENDALE, CA 91201-2497 • 818-247-6000 • FAX 818-500-9912
www.glenair.com E-Mail: sales@glenair.com

892-005
Circular Threaded, Inline Receptacle Connector with Insulated Wire

Table II: Dimensions

892-005-01 Without Termination Platform | 892-005-02 With Termination Platform

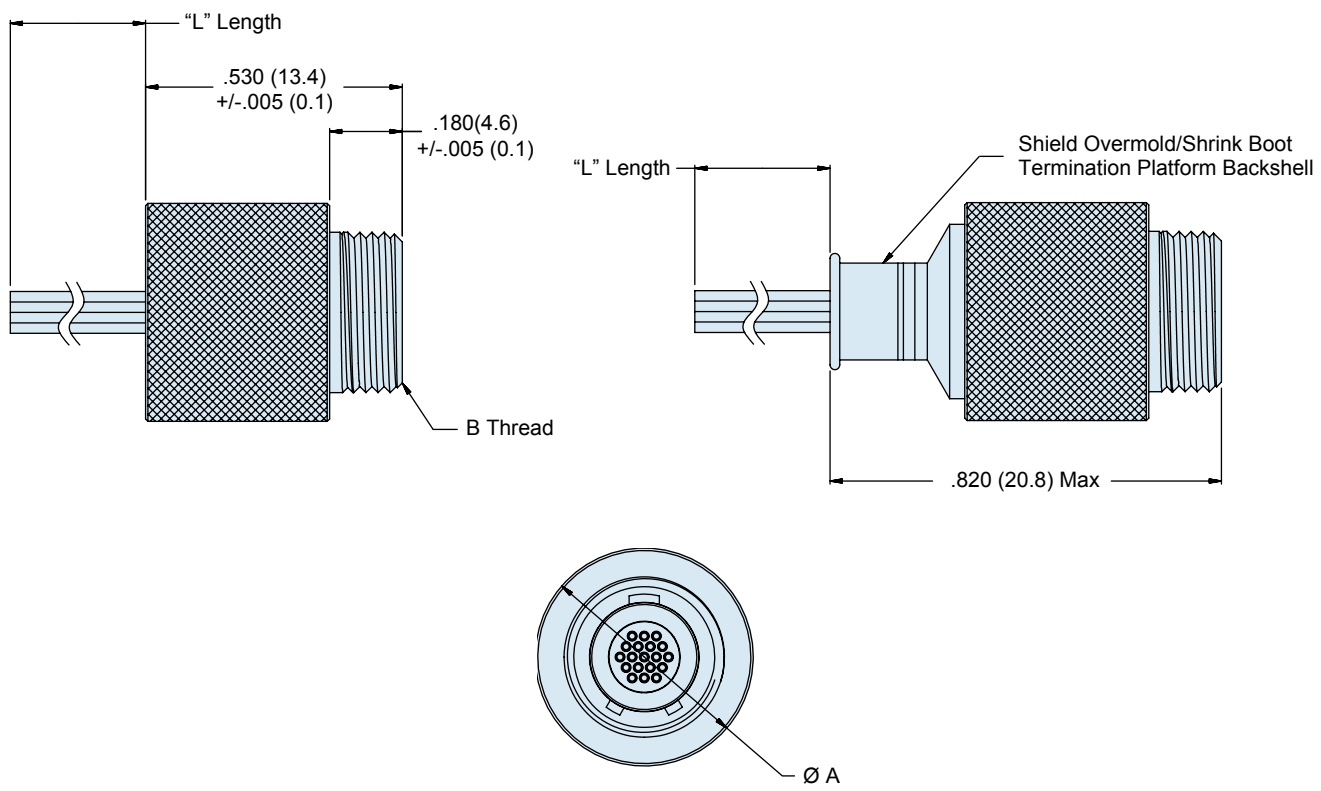

Size	Ø A +/-.005	B Thread
1-4	.425 (10.8)	M7.0 x 0.75 - 6g
1-7	.425 (10.2)	M7.0 x 0.75 - 6g
2-19	.475 (12.1)	M8.5 x 0.75 - 6g
3-37	.526 (13.4)	M9.5 x 0.75 - 6g
4-44	.558 (14.2)	M10.5 x 0.75 - 6g
4-55	.558 (14.2)	M10.5 x 0.75 - 6g

Material/finish:

- Shell/spanner nut/backshell - see part number breakdown
- Insulator - LCP/na
- Socket contacts - gold alloy
- O-rings - fluorosilicone/na
- Internal latching spring - stainless steel/gold plate

Dimensions in inches (millimeters) and are subject to change without notice.

© 2013 Glenair, Inc.

GLENAIR, INC. • 1211 AIR WAY • GLENDALE, CA 91201-2497 • 818-247-6000 • FAX 818-500-9912
www.glenair.com E-Mail: sales@glenair.com

892-006
Circular Threaded, Plug Connector with Insulated Wire

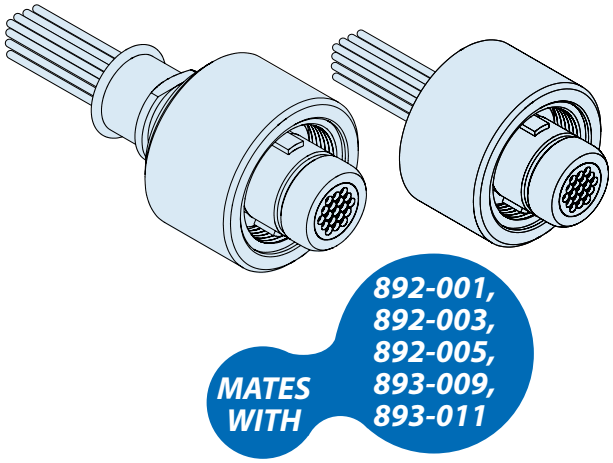

Glenair Threaded Coupling Plug Connectors feature gold alloy TwistPin contacts, offering premium performance and reliability for demanding applications. Available with or without backshell, overmolded or shrink boot.

Choose Aluminum or Stainless Steel Shells in 6 layouts from 4 to 55 contacts. These connectors are intermateable with 892-001, 892-003, 892-005, 893-009, and 893-011 threaded coupling receptacle connectors.

How To Order Circular Nano Connectors

Sample Part Number	892	-006	-02	1-7	N	A2	-0	A	7	-12

Series	**892** - Nano Circular with Insulated Wire
Shell Style	**006** - Threaded Coupling Plug
Accessory	**01** - No Backshell **02** - With Backshell **03** - Overmolded **04** - Shrink Boot
Shell Size/Contact Arrangement	**1-4** - Shell Size 1 with 4 contacts **1-7** - Shell Size 1 with 7 contacts **2-19** - Shell Size 2 with 19 contacts See Table I **3-37** - Shell Size 3 with 37 contacts **4-44** - Shell Size 4 with 44 contacts **4-55** - Shell Size 4 with 55 contacts
Polarization	**N** - Normal **A** - Alternate
Shell Material/Finish	**A2** - Aluminum/Electroless Nickel **A5**- Aluminum/Gold Over Nickel **S1** - Stainless Steel/Zinc Cobalt (Black) **S2** - Stainless Steel/Passivated
Wire Gauge	**0** - 30 AWG **2** - 32 AWG
Wire Type	**A** - Ultralightweight XLETFE insulation, silver coated ultrahigh strength copper **B** - Extruded PTFE insulation, silver-coated copper NEMA HP3-ETX (MIL-W-16878/6) **C** - Cross linked modified ETFE insulation, silver coated high strength copper. MIL-W-22759/33 (not available in #32 AWG)
Wire Color	**1** - White **2** - Yellow **7** - 10 Color repeating (Wire type **A** is striped, types **B** and **C** are solid colors)
Wire Length (Inches)	**12** = 12.00 + 1.00 Inches

Table I: 892 Circular Plug Mating Face Views

Size 1-4 4 Contacts	Size 1-7 7 Contacts	Size 2-19 19 Contacts	Size 3-37 37 Contacts	Size 4-44 44 Contacts	Size 4-55 55 Contacts
	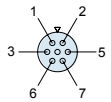	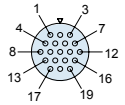	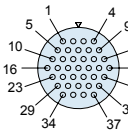	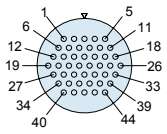	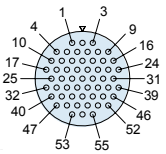

Dimensions in inches (millimeters) and are subject to change without notice.

© 2013 Glenair, Inc.

GLENAIR, INC. • 1211 AIR WAY • GLENDALE, CA 91201-2497 • 818-247-6000 • FAX 818-500-9912
www.glenair.com E-Mail: sales@glenair.com

892-006
Circular Threaded, Plug Connector with Insulated Wire

Table II: Dimensions

892-006-01 Without Termination Platform	892-006-02 With Termination Platform

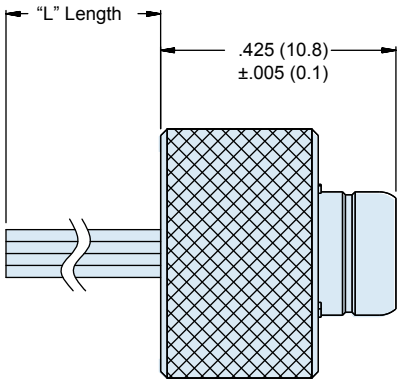

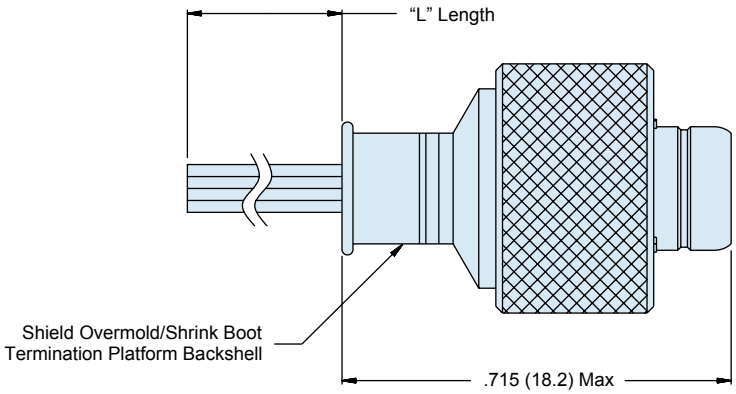

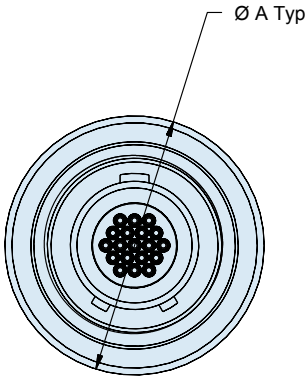

Size	Ø A +/-.005
1-4	.425 (10.8)
1-7	.425 (10.8)
2-19	.479 (12.2)
3-37	.526 (13.4)
4-44	.558 (14.2)
4-55	.558 (14.2)

Material/Finish:

- Shell/coupling ring/backshell - see part number breakdown
- Insulator - LCP/na
- Pin contacts - gold alloy
- Snap ring - stainless steel/passivated

Dimensions in inches (millimeters) and are subject to change without notice.

© 2013 Glenair, Inc.

GLENAIR, INC. • 1211 AIR WAY • GLENDALE, CA 91201-2497 • 818-247-6000 • FAX 818-500-9912
www.glenair.com E-Mail: sales@glenair.com

892-007
Circular Breakaway, Plug Connector with Insulated Wire

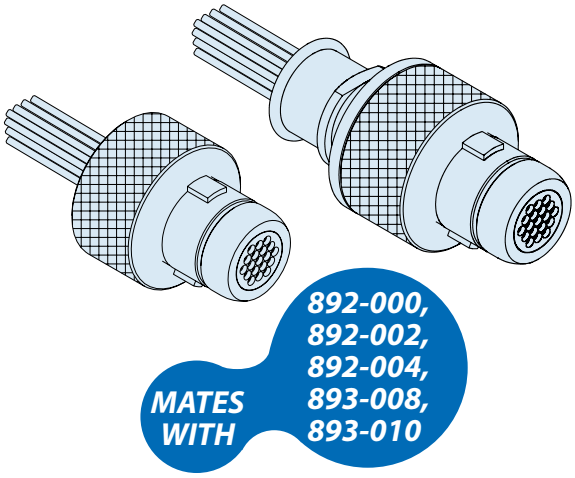

Glenair Breakaway Plug Connectors feature gold alloy TwistPin contacts, offering premium performance and reliability for demanding applications. Available with or without backshell, overmolded or shrink boot.

Choose Aluminum or Stainless Steel Shells in 6 layouts from 4 to 55 contacts. These connectors are intermateable with 892-000, 892-002, 892-004, 893-008, and 893-010 breakaway receptacle connectors.

How To Order Circular Nano Connectors

Sample Part Number	892	-007	-02	1-7	N	A2	-0	A	7	-12

Series	**892** - Nano Circular With Insulated Wire
Shell Style	**-007** - Breakaway Plug
Accessory	**-01** - No Backshell **-02** - With Backshell **-03** - Overmolded **-04** - Shrink Boot
Shell Size/Contact Arrangement	**1-4** - Shell Size 1 with 4 contacts **3-37** - Shell Size 3 with 37 contacts **1-7** - Shell Size 1 with 7 contacts **4-44** - Shell Size 4 with 44 contacts **2-19** - Shell Size 2 wih 19 contacts **4-55** - Shell Size 4 with 55 contacts See Table I
Polarization	**N** - Normal **A** - Alternate
Shell Material/Finish	**A2** - Aluminum/Electroless Nickel **S1** - Stainless Steel/Zinc Cobalt (Black) **A5**- Aluminum/Gold Over Nickel **S2** - Stainless Steel/Passivated
Wire Gauge	**-0** - 30 AWG **-2** - 32 AWG
Wire Type	**A** - Ultralightweight XLETFE insulation, silver coated ultrahigh strength copper **B** - Extruded PTFE insulation, silver-coated copper NEMA HP3-ETX (MIL-W-16878/6) **C** - Cross linked modified ETFE insulation, silver coated high strength copper. MIL-W-22759/33 (not available in #32 AWG)
Wire Color	**1** - White **2** - Yellow **7** - 10 Color repeating (Wire type **A** is striped, types **B** and **C** are solid colors)
Wire Length (Inches)	**-12** = 12.00 + 1.00 Inches

Table I: 892 Circular Plug Mating Face Views

Size 1-4 4 Contacts	Size 1-7 7 Contacts	Size 2-19 19 Contacts	Size 3-37 37 Contacts	Size 4-44 44 Contacts	Size 4-55 55 Contacts
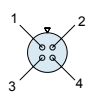	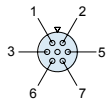	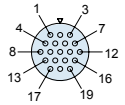	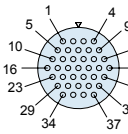	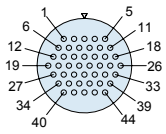	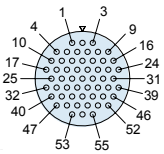

Dimensions in inches (millimeters) and are subject to change without notice.

© 2013 Glenair, Inc.

GLENAIR, INC. • 1211 AIR WAY • GLENDALE, CA 91201-2497 • 818-247-6000 • FAX 818-500-9912
www.glenair.com E-Mail: sales@glenair.com

892-007
Circular Breakaway, Plug Connector with Insulated Wire

Table II: Dimensions

892-007-01 Without Termination Platform	892-007-02 With Termination Platform

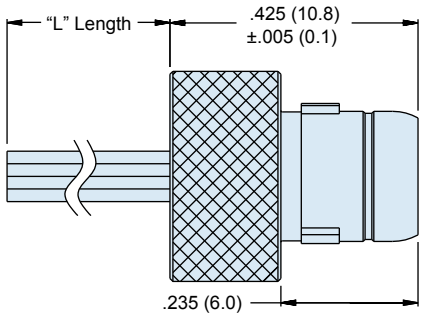

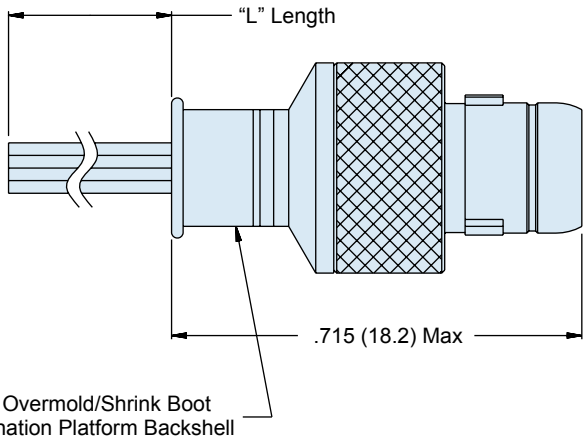

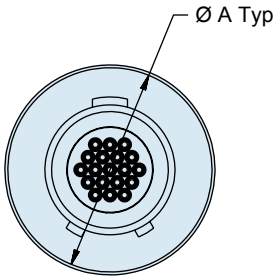

Size	Ø A +/-.005
1-4	.310 (7.9)
1-7	.310 (7.9)
2-19	.360 (9.1)
3-37	.411 (10.4)
4-44	.443 (11.3)
4-55	.443 (11.3)

Material/Finish:

- Shell/backshell - see part number breakdown
- Insulator - LCP/na
- Pin contacts - gold alloy

Dimensions in inches (millimeters) and are subject to change without notice.

© 2013 Glenair, Inc.

GLENAIR, INC. • 1211 AIR WAY • GLENDALE, CA 91201-2497 • 818-247-6000 • FAX 818-500-9912
www.glenair.com E-Mail: sales@glenair.com

893-008
Circular Breakaway, Rear Panel Mount Receptacle Connector with Straight PCB Termination

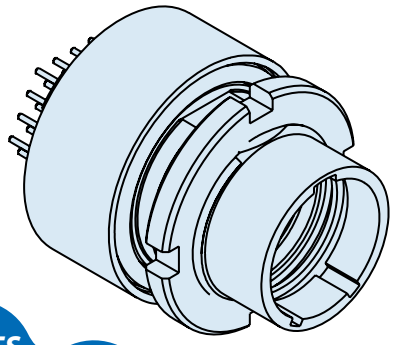

MATES WITH 892-007

Glenair Rear Panel Mount Breakaway Receptacle Connectors feature gold alloy TwistPin contacts, offering premium performance and reliability for demanding applications.

Choose Aluminum or Stainless Steel Shells in 6 layouts from 4 to 55 contacts. These connectors are intermateable with nanominiature plug connectors 892-007 plug connectors.

Pre-Tinned PC Tails are coated with Sn63-Pb37 tin-lead for excellent solderability.

Material/Finish:

- Shell/spanner nut - see part number breakdown
- Insulator - LCP/na
- Socket contacts - gold alloy
- O-rings - fluorosilicone/na
- Internal latching spring - stainless steel/gold plated
- PCB tray(s) - LCP/na
- PC tails - copper alloy/pre-tinned Sn63/Pb37

C

How To Order Circular Nano Connectors

Sample Part Number	893	-008	1-7	N	A2	-0	D3	-S1
Series	**893** - Nano Circular with PCB Termination							
Shell Style	**008** - Rear Panel Mount Breakaway Receptacle							
Shell Size/Contact Arrangement	**1-4** - Shell Size 1 with 4 contacts **1-7** - Shell Size 1 with 7 contacts **2-19** - Shell Size 2 wih 19 contacts **3-37** - Shell Size 3 with 37 contacts **4-44** - Shell Size 4 with 44 contacts **4-55** - Shell Size 4 with 55 contacts **See Table I**							
Polarization	**N** - Normal **A** - Alternate							
Shell Material/Finish	**A2** - Aluminum/Electroless Nickel **A5**- Aluminum/Gold Over Nickel **S1** - Stainless Steel/Zinc Cobalt (Black) **S2** - Stainless Steel/Passivated							
Wire Gauge	**0** - 30 AWG							
Wire Type	**D3** - Single Strand Copper Alloy Wire Uninsulated, Pre-tinned							
PC Tail Length (inches)	**S1** - .080" Straight Lead **S2** - .110" Straight Lead **S3** - .140" Straight Lead **S4** - .170" Straight Lead							

Table I: 893 Circular Receptacle Mating Face Views

Size 1-4 4 Contacts	Size 1-7 7 Contacts	Size 2-19 19 Contacts	Size 3-37 37 Contacts	Size 4-44 44 Contacts	Size 4-55 55 Contacts
	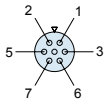	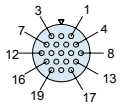	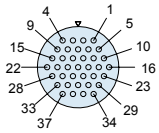	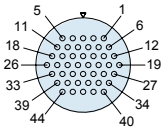	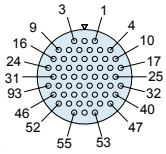

Dimensions in inches (millimeters) and are subject to change without notice.

© 2013 Glenair, Inc.

GLENAIR, INC. • 1211 AIR WAY • GLENDALE, CA 91201-2497 • 818-247-6000 • FAX 818-500-9912
www.glenair.com E-Mail: sales@glenair.com

893-008
Circular Breakaway, Rear Panel Mount Receptacle Connector with Straight PCB Termination

Table II: Dimensions

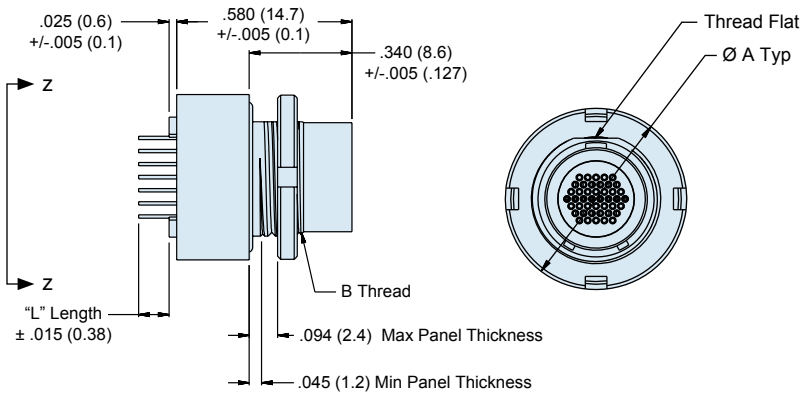

Size	Ø A +/-.005	B Thread
1-4	.429 (10.9)	M7.0 x 0.75 - 6g
1-7	.429 (10.9)	M7.0 x 0.75 - 6g
2-19	.488 (12.4)	M8.5 x 0.75 - 6g
3-37	.528 (13.4)	M9.5 x 0.75 - 6g
4-44	.567 (14.5)	M10.5 x 0.75 - 6g
4-55	.567 (14.5)	M10.5 x 0.75 - 6g

Table III: Rear Panel Mount Panel Cut-Out

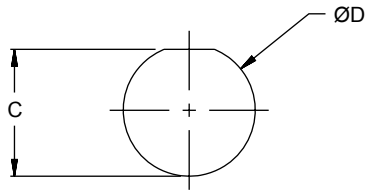

Size	C +.002/-.001	Ø D +.002/-.001
1-4	.260 (6.7)	.280 (7.1)
1-7	.260 (6.7)	.280 (7.1)
2-19	.318 (7.8)	.340 (8.7)
3-37	.361 (9.2)	.378 (9.6)
4-44	.401 (10.2)	.398 (10.7)
4-55	.401 (10.2)	.398 (10.7)

Table IV: Recommended PCB Arrangements Per View Z ◄► Z

Size 1-4

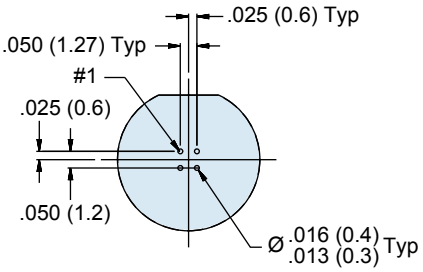

Size 1-7

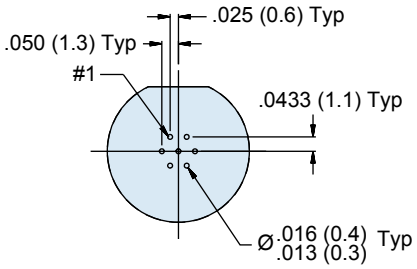

Size 2-19

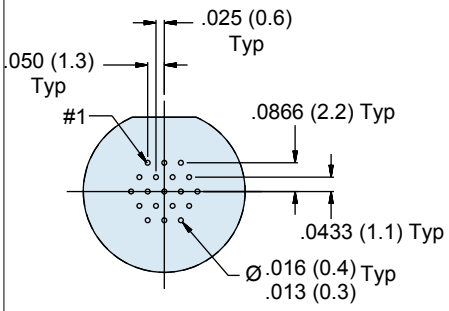

Size 3-37

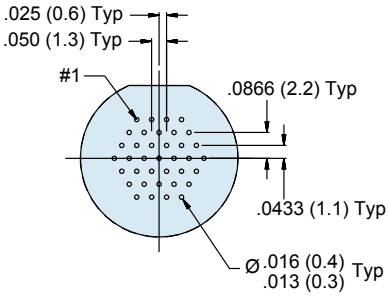

Size 4-44

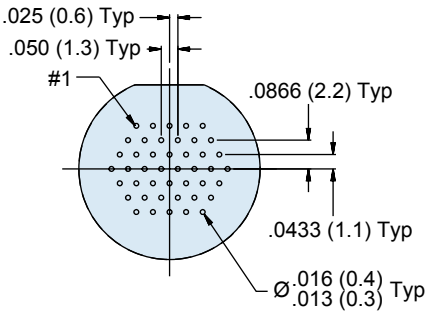

Size 4-55

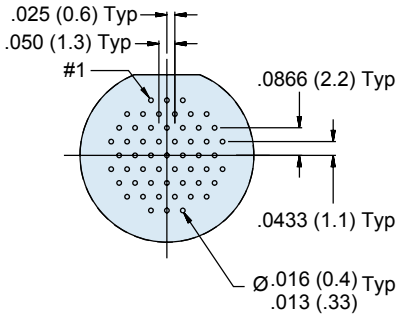

Dimensions in inches (millimeters) and are subject to change without notice.

© 2013 Glenair, Inc.

GLENAIR, INC. • 1211 AIR WAY • GLENDALE, CA 91201-2497 • 818-247-6000 • FAX 818-500-9912
www.glenair.com E-Mail: sales@glenair.com

893-009
Circular Threaded, Rear Panel Mount Receptacle Connector with Straight PCB Termination

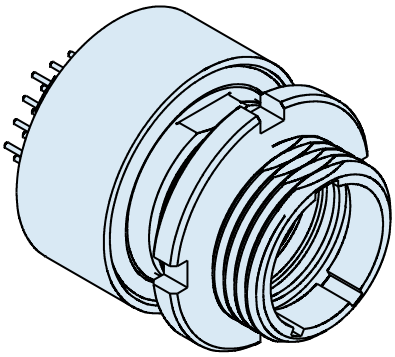

MATES WITH 892-006

Glenair Rear Panel Mount Threaded Coupling Receptacle Connectors feature gold alloy TwistPin contacts, offering premium performance and reliability for demanding applications. Available with or without backshell, overmolded or shirink boot.

Choose Aluminum or Stainless Steel Shells in 6 layouts from 4 to 55 contacts. These connectors are intermateable with nanominiature plug connectors 892-006 plug connectors.

Pre-Tinned PC Tails are coated with Sn63-Pb37 tin-lead for excellent solderability.

Material/Finish:

- Shell/spanner nut - see part number breakdown
- Insulator - LCP/na
- Socket contacts - gold alloy
- O-rings - fluorosilicone/na
- Internal latching spring - stainless steel/gold plated
- PCB tray(s) - LCP/na
- PC tails - copper alloy/pre-tinned Sn63/Pb37

C

How To Order Circular Nano Connectors

Sample Part Number	893	-009	1-7	N	A2	-0	D3	-S1
Series	**893** - Nano Circular with PCB Termination							
Shell Style		**-009** - Rear Panel Mount Threaded Coupling Receptacle						
Shell Size/Contact Arrangement			**1-4** - Shell Size 1 with 4 contacts **1-7** - Shell Size 1 with 7 contacts **2-19** - Shell Size 2 wih 19 contacts **See Table I** **3-37** - Shell Size 3 with 37 contacts **4-44** - Shell Size 4 with 44 contacts **4-55** - Shell Size 4 with 55 contacts					
Polarization				**N** - Normal **A** - Alternate				
Shell Material/Finish					**A2** - Aluminum/Electroless Nickel **A5**- Aluminum/Gold Over Nickel **S1** - Stainless Steel/Zinc Cobalt (Black) **S2** - Stainless Steel/Passivated			
Wire Gauge						**-0** - 30 AWG		
Wire Type							**D3** - Single Strand Copper Alloy Wire Uninsulated, Pre-tinned	
PC Tail Length (inches)								**-S1** - .080" Straight Lead **-S2** - .110" Straight Lead **-S3** - .140" Straight Lead **-S4** - .170" Straight Lead

Table 1: Circular Receptacle Mating Face Views

Size 1-4 4 Contacts	Size 1-7 7 Contacts	Size 2-19 19 Contacts	Size 3-37 37 Contacts	Size 4-44 44 Contacts	Size 4-55 55 Contacts
	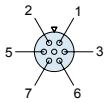	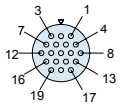	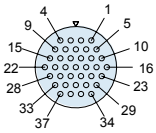	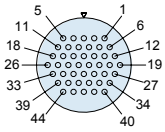	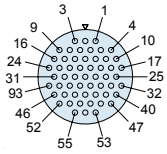

Dimensions in inches (millimeters) and are subject to change without notice.

© 2013 Glenair, Inc.

GLENAIR, INC. • 1211 AIR WAY • GLENDALE, CA 91201-2497 • 818-247-6000 • FAX 818-500-9912
www.glenair.com E-Mail: sales@glenair.com

893-009
Circular Threaded, Rear Panel Mount Receptacle Connector with Straight PCB Termination

Table II: Dimensions

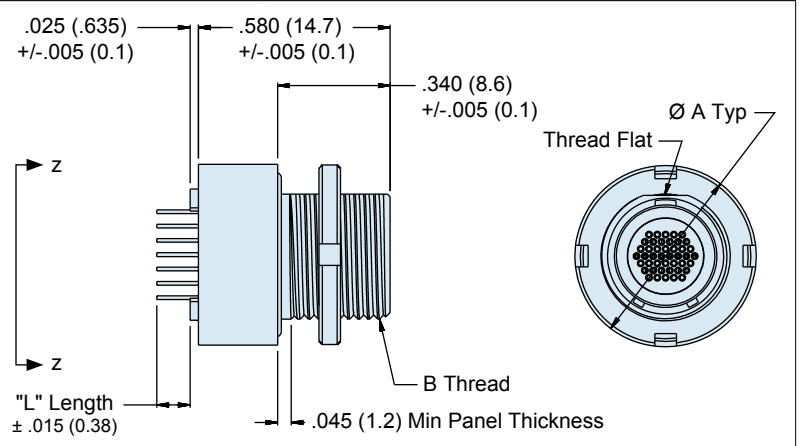

Size	Ø A +/-.005	B Thread
1-4	.429 (10.9)	M7.0 x 0.75 - 6g
1-7	.429 (10.9)	M7.0 x 0.75 - 6g
2-19	.488 (12.4)	M8.5 x 0.75 - 6g
3-37	.528 (13.4)	M9.5 x 0.75 - 6g
4-44	.567 (14.5)	M10.5 x 0.75 - 6g
4-55	.567 (14.5)	M10.5 x 0.75 - 6g

Table III: Rear Panel Mount Panel Cut-Out

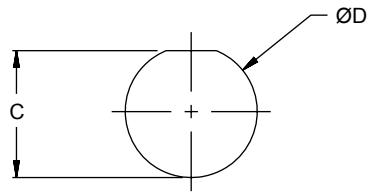

Size	C +.002 / -.001	Ø D +.002 / -.001
1-4	.260 (6.7)	.280 (7.1)
1-7	.260 (6.7)	.280 (7.1)
2-19	.318 (7.8)	.340 (8.7)
3-37	.361 (9.2)	.378 (9.6)
4-44	.401 (10.2)	.470 (10.7)
4-55	.401 (10.2)	.470 (10.7)

Table IV : Recommended PCB Layouts Per View Z ◄► Z

Size 1-4

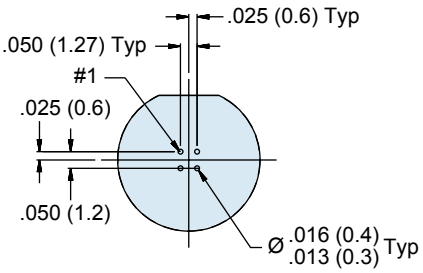

Size 1-7

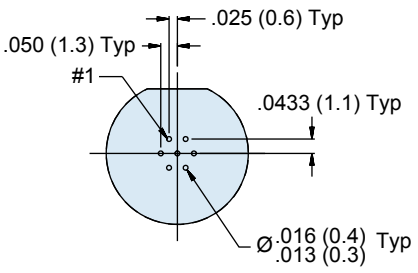

Size 2-19

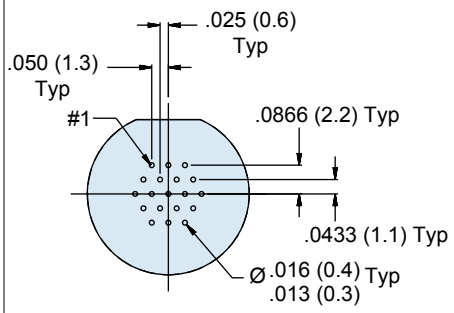

Size 3-37

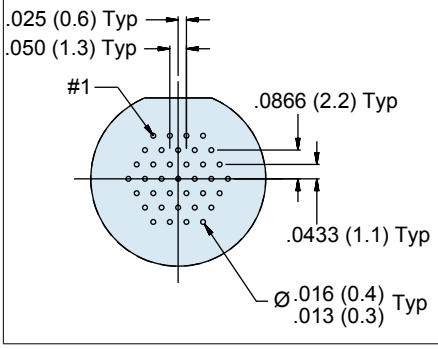

Size 4-44

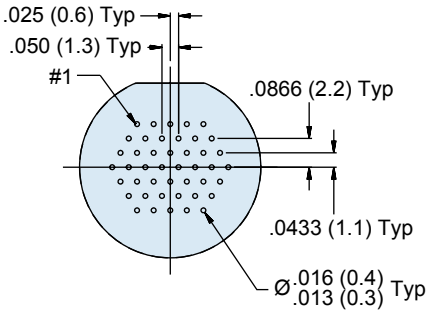

Size 4-55

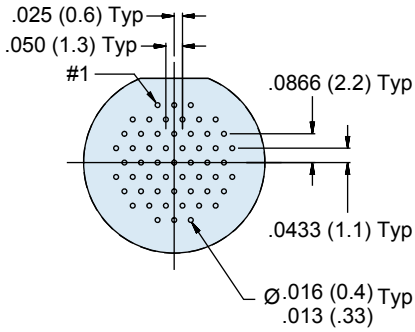

Dimensions in inches (millimeters) and are subject to change without notice.

© 2013 Glenair, Inc.

GLENAIR, INC. • 1211 AIR WAY • GLENDALE, CA 91201-2497 • 818-247-6000 • FAX 818-500-9912
www.glenair.com E-Mail: sales@glenair.com

893-010
Circular Breakaway, Rear Panel Mount Receptacle Connector with Right Angle PCB Termination

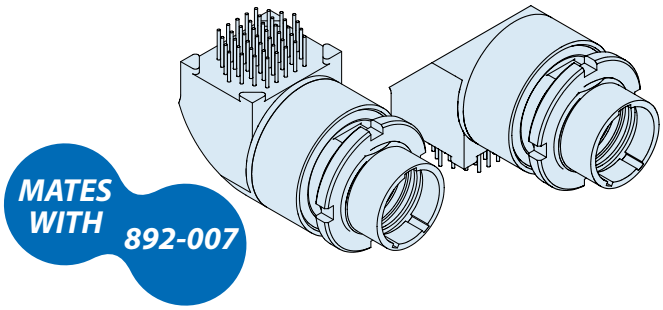

Glenair Rear Panel Mount Breakaway Right Angle PCB Connectors feature gold alloy TwistPin contacts, offering premium performance and reliability for demanding applications. Available with or without backshell, overmolded or shirink boot.

Choose Aluminum or Stainless Steel Shells in 6 layouts from 4 to 55 contacts. These connectors are intermateable with nanominiature plug connectors 892-007 plug connectors.

Pre-Tinned PC Tails are coated with Sn63-Pb37 tin-lead for excellent solderability.

How To Order Circular Nano Connectors

Sample Part Number	893	-010	-1-7	N	A2	-0	D3	-T1

Series	**893** - Nano Circular with PCB Termination
Shell Style	**010** - Rear Panel Mount Breakaway Receptacle
Shell Size/Contact Arrangement	**1-4** - Shell Size 1 with 4 contacts **1-7** - Shell Size 1 with 7 contacts **2-19** - Shell Size 2 wih 19 contacts **3-37** - Shell Size 3 with 37 contacts **4-44** - Shell Size 4 with 44 contacts **4-55** - Shell Size 4 with 55 contacts See Table 1
Polarization	**N** - Normal **A** - Alternate
Shell Material/Finish	**A2** - Aluminum/Electroless Nickel **A5**- Aluminum/Gold Over Nickel **S1** - Stainless Steel/Zinc Cobalt (Black) **S2** - Stainless Steel/Passivated
Wire Gauge	**0** - 30 AWG
Wire Type	**D3** - Single Strand Copper Alloy Wire Uninsulated, Pre-tinned
90 Degree PC Tail Length (inches)	**T1** - .080 Lead Top **T2** - .110 Lead Top **T3** - .140 Lead Top **T4** -.170 Lead Top **B1** - .080 Lead Bottom **B2** - .110 Lead Bottom **B3** - .140 Lead Bottom **B4** - .170 Lead Bottom

Table I: Circular Receptacle Mating Face Views

Size 1-4 4 Contacts	Size 1-7 7 Contacts	Size 2-19 19 Contacts	Size 3-37 37 Contacts	Size 4-44 44 Contacts	Size 4-55 55 Contacts
	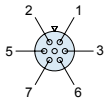	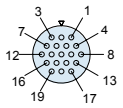	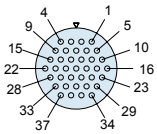	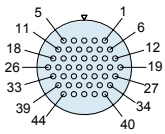	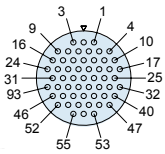

Table II: Rear Panel Mount Panel Cut-Out

Size	E +.002 / -.001	Ø F +.002 / -.001
1-4	.260 (6.7)	.280 (7.1)
1-7	.260 (6.7)	.280 (7.1)
2-19	.318 (7.8)	.338 (8.6)
3-37	.361 (9.2)	.378 (9.6)
4-44	.401 (10.2)	.398 (10.1)
4-55	.401 (10.2)	.398 (10.1)

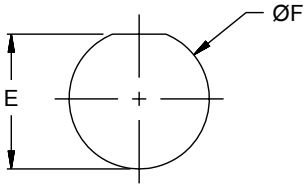

Material/Finish:

- Shell/spanner nut - see part number breakdown
- Insulator - LCP/na
- Socket contacts - gold alloy
- O-rings - fluorosilicone/na
- Internal latching spring - stainless steel/gold plated
- PCB tray(s) - LCP/na
- PC tails - copper alloy/pre-tinned Sn63/Pb37

Dimensions in inches (millimeters) and are subject to change without notice.

© 2013 Glenair, Inc.

GLENAIR, INC. • 1211 AIR WAY • GLENDALE, CA 91201-2497 • 818-247-6000 • FAX 818-500-9912
www.glenair.com E-Mail: sales@glenair.com

893-010
Circular Breakaway, Rear Panel Mount Receptacle Connector with Right Angle PCB Termination

Table III: Right Angle Bottom Lead Dimensions

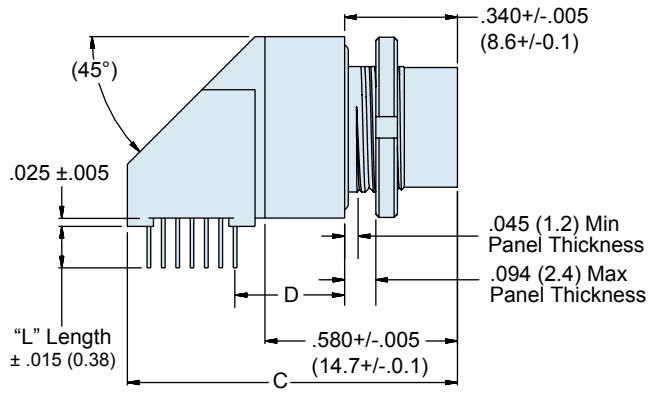

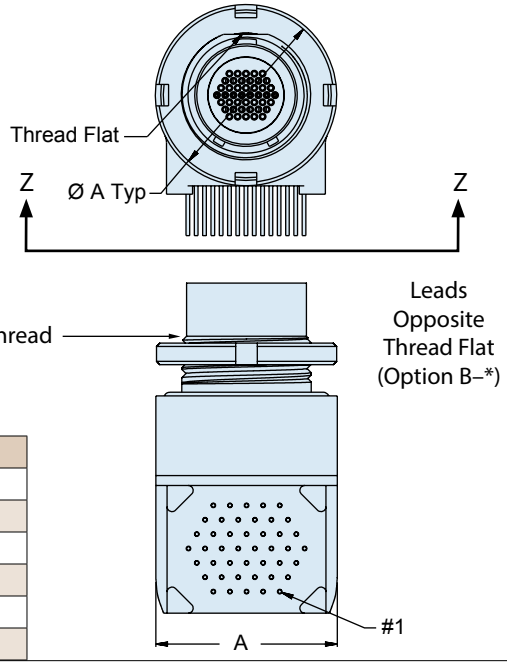

Size	Ø A +/-.005	B Thread	C +/- .020	D ± .005
1-4	.429 (10.9)	M7.0 x 0.75 - 6g	.832 (0.7)	.350 (0.1)
1-7	.429 (10.9)	M7.0 x 0.75 - 6g	.832 (0.7)	.335 (0.1)
2-19	.488 (12.4)	M8.5 x 0.75 - 6g	.918 (0.8)	.335 (0.1)
3-37	.528 (13.4)	M9.5 x 0.75 - 6g	1.005 (1.0)	.335 (0.1)
4-44	.567 (14.5)	M10.5 x 0.75 - 6g	1.005 (1.0)	.330 (0.1)
4-55	.567 (14.5)	M10.5 x 0.75 - 6g	1.092 (1.2)	.335 (0.1)

Table IV: Recommended PCB Layout View Per View Z ◄► Z

Size 1-4

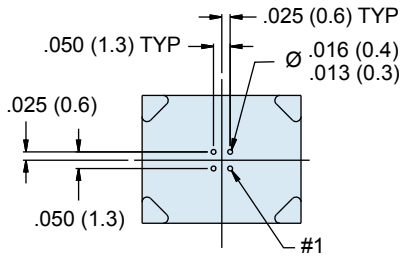

Size 1-7

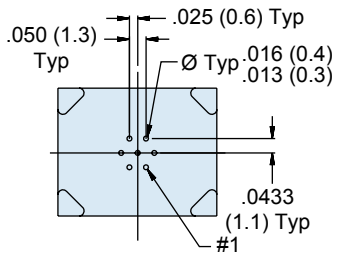

Size 2-19

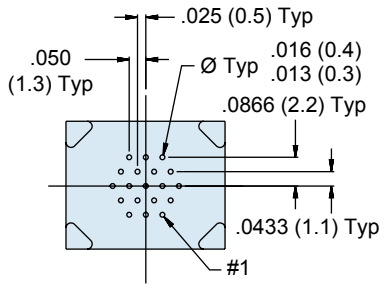

Size 3-37

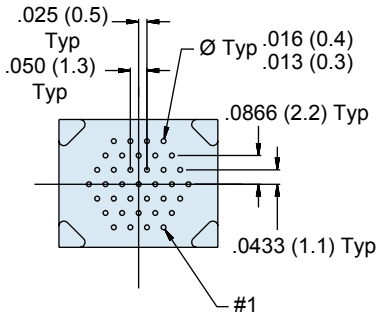

Size 4-44

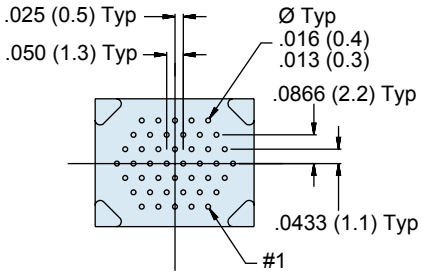

Size 4-55

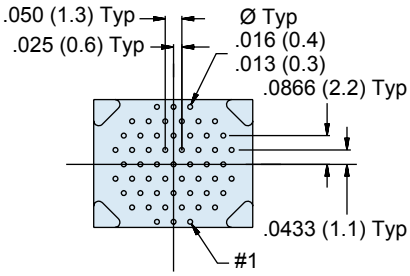

Dimensions in inches (millimeters) and are subject to change without notice.

© 2013 Glenair, Inc.

GLENAIR, INC. • 1211 AIR WAY • GLENDALE, CA 91201-2497 • 818-247-6000 • FAX 818-500-9912
www.glenair.com E-Mail: sales@glenair.com

893-010
Circular Breakaway, Rear Panel Mount Receptacle Connector with Right Angle PCB Termination

Table V: Right Angle Top Lead Dimensions

Size	Ø A +/-.005	B Thread	C +/- .020	D ± .005
1-4	.429 (10.9)	M7.0 x 0.75 - 6g	.832 (21.1)	.350 (8.9)
1-7	.429 (10.9)	M7.0 x 0.75 - 6g	.832 (21.1)	.335 (8.5)
2-19	.488 (12.4)	M8.5 x 0.75 - 6g	.918 (23.3)	.335 (8.5)
3-37	.528 (13.4)	M9.5 x 0.75 - 6g	1.005 (25.5)	.335 (8.5)
4-44	.567 (14.5)	M10.5 x 0.75 - 6g	1.005 (25.5)	.330 (8.4)
4-55	.567 (14.5)	M10.5 x 0.75 - 6g	1.092 (27.7)	.335 (8.5)

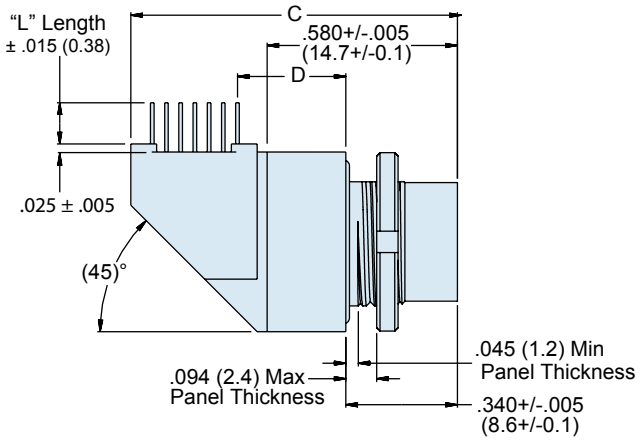

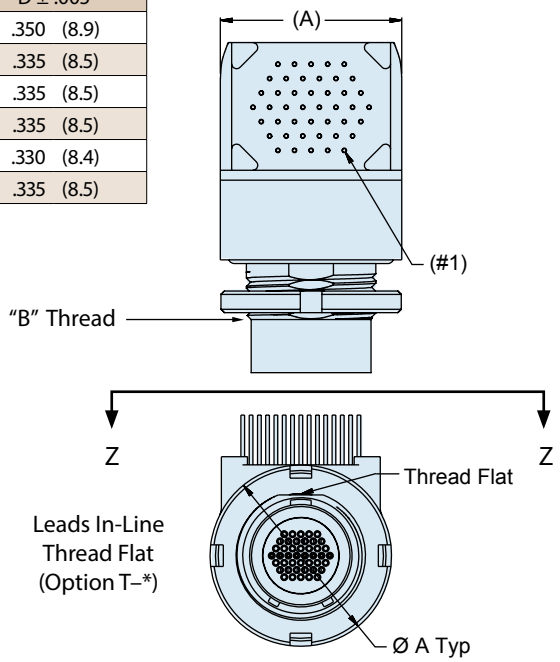

Table VI: Recommended PCB Layout Per View Z ◄► Z

Size 1-4

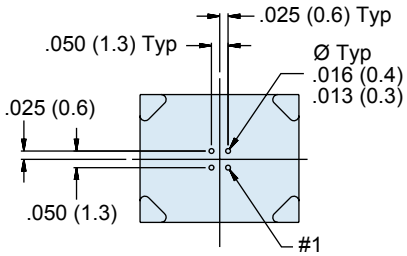

Size 1-7

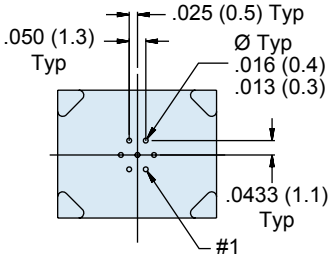

Size 2-19

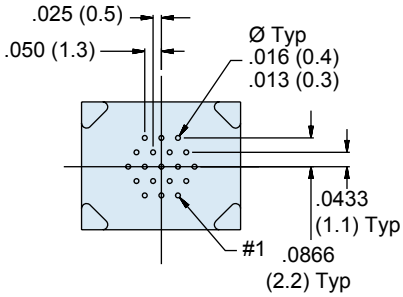

Size 3-37

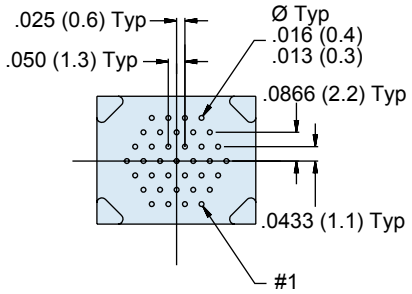

Size 4-44

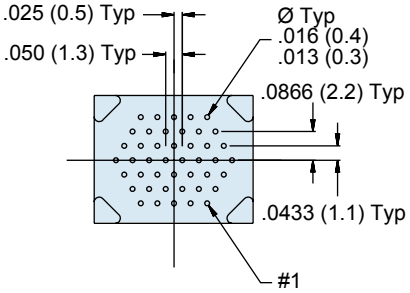

Size 4-55

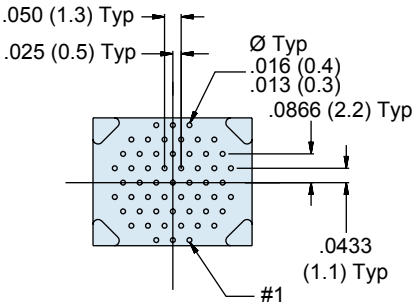

Dimensions in inches (millimeters) and are subject to change without notice.

© 2013 Glenair, Inc.

GLENAIR, INC. • 1211 AIR WAY • GLENDALE, CA 91201-2497 • 818-247-6000 • FAX 818-500-9912
www.glenair.com E-Mail: sales@glenair.com

893-011
Circular Threaded, Rear Panel Mount Receptacle Connector with Right Angle PCB Termination

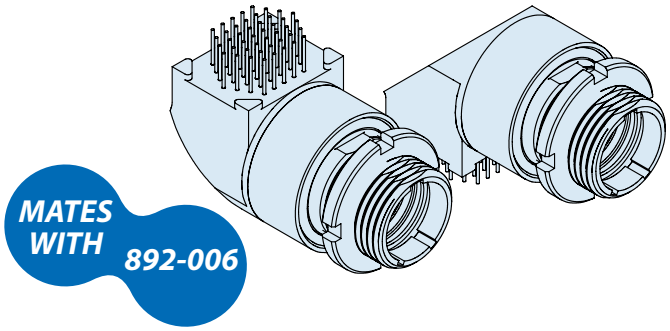

Glenair Rear Panel Mount Threaded Right Angle PCB Connectors feature gold alloy TwistPin contacts, offering premium performance and reliability for demanding applications. Available with or without backshell, overmolded or shrink boot.

Choose Aluminum or Stainless Steel Shells in 6 layouts from 4 to 55 contacts. These connectors are intermateable with nanominiature plug connectors 892-006 plug connectors.

Pre-Tinned PC Tails are coated with Sn63-Pb37 tin-lead for excellent solderability.

C

How To Order Circular Nano Connectors

Sample Part Number	893	-011	-1-7	N	A2	-0	D3	-T1

Series	**893** - Nano Circular with PCB Termination
Shell Style	**011** - Rear Panel Mount Threaded Coupling Receptacle
Shell Size/Contact Arrangement	**1-4** - Shell Size 1 with 4 contacts **1-7** - Shell Size 1 with 7 contacts **2-19** - Shell Size 2 wih 19 contacts **3-37** - Shell Size 3 with 37 contacts **4-44** - Shell Size 4 with 44 contacts **4-55** - Shell Size 4 with 55 contacts See Table 1
Polarization	**N** - Normal **A** - Alternate
Shell Material/Finish	**A2** - Aluminum/Electroless Nickel **A5**- Aluminum/Gold Over Nickel **S1** - Stainless Steel/Zinc Cobalt (Black) **S2** - Stainless Steel/Passivated
Wire Gauge	**0** - 30 AWG
Wire Type	**D3** - Single Strand Copper Alloy Wire Uninsulated, Pre-tinned
90 Degree PC Tail Length (inches)	**T1** - .080" Lead Top **T3** - .140" Lead Top **B1** - .080" Lead Bottom **B3** - .140" Lead Bottom **T2** - .110' Lead Top **T4** -.170" Lead Top **B2** - .110" Lead Bottom **B4** - .170" Lead Bottom

Table 1: Circular Receptacle Mating Face Views

Size 1-4 4 Contacts	Size 1-7 7 Contacts	Size 2-19 19 Contacts	Size 3-37 37 Contacts	Size 4-44 44 Contacts	Size 4-55 55 Contacts
	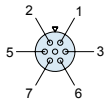	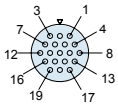	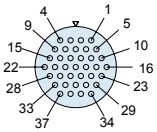	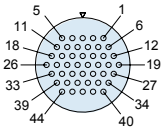	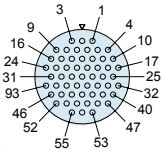

Table 2: Rear Panel Mount Panel Cut-out

Size	C +.002 / -.001	Ø S + .002/ -.001
1-4	.260 (6.7)	.280 (7.1)
1-7	.260 (6.7)	.280 (7.1)
2-19	.318 (7.8)	.340 (8.7)
3-37	.361 (9.2)	.378 (9.6)
4-44	.401 (10.2)	.398 (10.7)
4-55	.401 (10.2)	.398 (10.7)

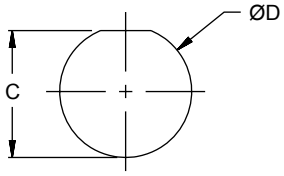

Material/Finish:

- Shell/spanner nut - see part number breakdown
- Insulator - LCP/na
- Socket contacts - gold alloy
- O-rings - fluorosilicone/na
- Internal latching spring - stainless steel/gold plated
- PCB tray(s) - LCP/na
- PC tails - copper alloy/pre-tinned Sn63-Pb37

Dimensions in inches (millimeters) and are subject to change without notice.

© 2013 Glenair, Inc.

GLENAIR, INC. • 1211 AIR WAY • GLENDALE, CA 91201-2497 • 818-247-6000 • FAX 818-500-9912
www.glenair.com E-Mail: sales@glenair.com

893-011
Circular Threaded, Rear Panel Mount Receptacle Connector with Right Angle PCB Termination

Table III: Dimensions for Bottom Lead Configuration

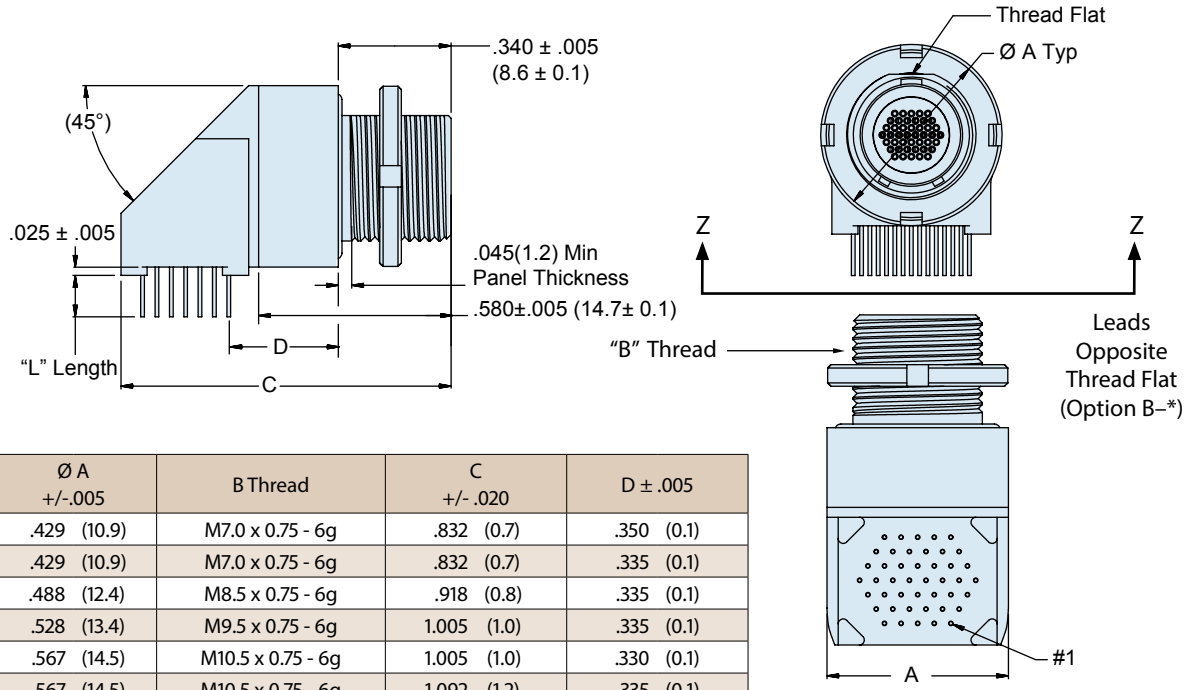

Size	Ø A +/-.005	B Thread	C +/- .020	D ± .005
1-4	.429 (10.9)	M7.0 x 0.75 - 6g	.832 (0.7)	.350 (0.1)
1-7	.429 (10.9)	M7.0 x 0.75 - 6g	.832 (0.7)	.335 (0.1)
2-19	.488 (12.4)	M8.5 x 0.75 - 6g	.918 (0.8)	.335 (0.1)
3-37	.528 (13.4)	M9.5 x 0.75 - 6g	1.005 (1.0)	.335 (0.1)
4-44	.567 (14.5)	M10.5 x 0.75 - 6g	1.005 (1.0)	.330 (0.1)
4-55	.567 (14.5)	M10.5 x 0.75 - 6g	1.092 (1.2)	.335 (0.1)

Table IV: Recommended PCB Layouts Per View Z ↔ Z

Size 1-4

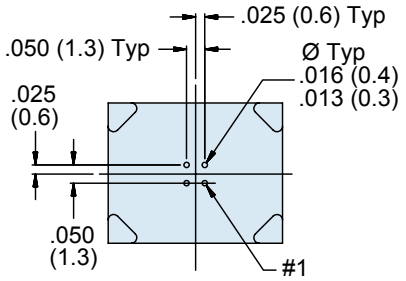

Size 1-7

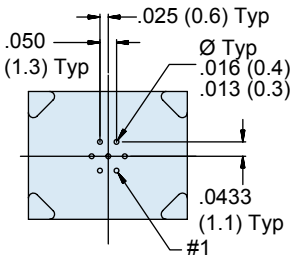

Size 2-19

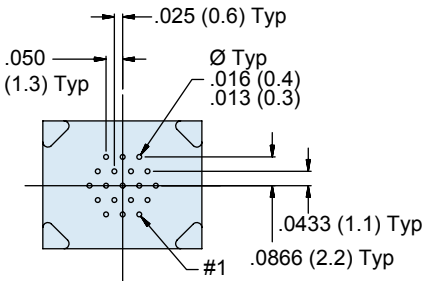

Size 3-37

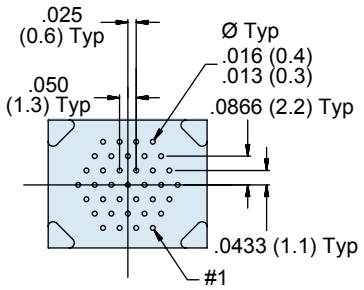

Size 4-44

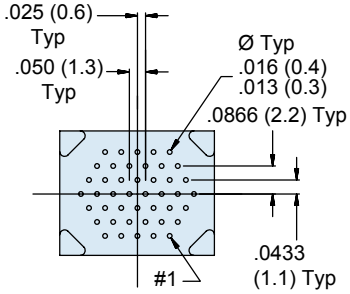

Size 4-55

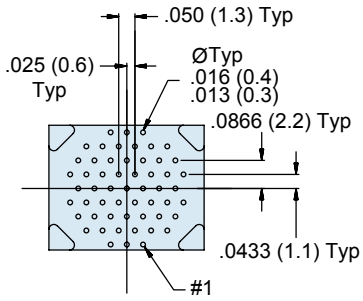

Dimensions in inches (millimeters) and are subject to change without notice.

© 2013 Glenair, Inc.

GLENAIR, INC. • 1211 AIR WAY • GLENDALE, CA 91201-2497 • 818-247-6000 • FAX 818-500-9912
www.glenair.com E-Mail: sales@glenair.com

893-011
Circular Threaded, Rear Panel Mount Receptacle Connector with Right Angle PCB Termination

Table V: Top Lead Dimensions

Size	Ø A +/-.005	B Thread	C +/- .020
1-4	.429 (10.9)	M7.0 x 0.75 - 6g	.832 (0.7)
1-7	.429 (10.9)	M7.0 x 0.75 - 6g	.832 (0.7)
2-19	.488 (12.4)	M8.5 x 0.75 - 6g	.918 (0.8)
3-37	.528 (13.4)	M9.5 x 0.75 - 6g	1.005 (1.0)
4-44	.567 (14.5)	M10.5 x 0.75 - 6g	1.005 (1.0)
4-55	.567 (14.5)	M10.5 x 0.75 - 6g	1.092 (1.2)

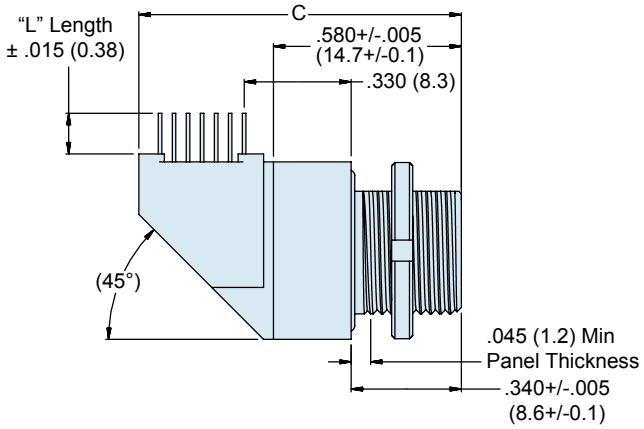

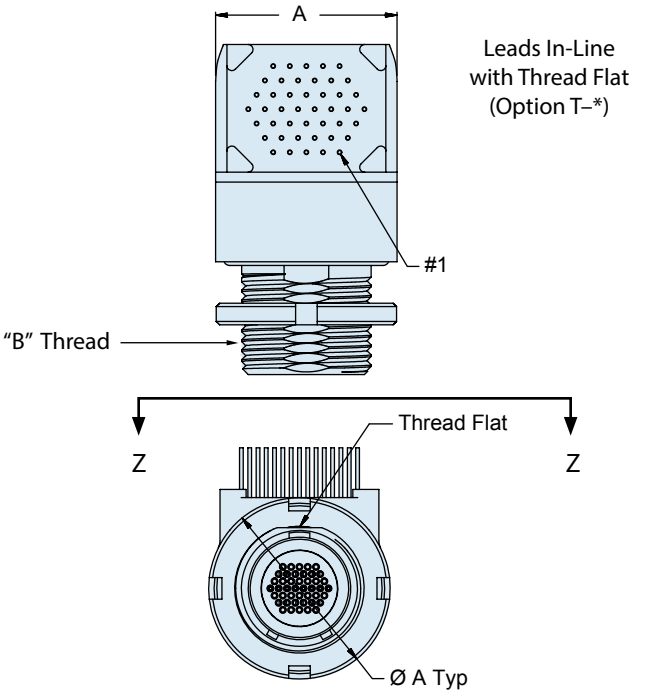

Table VI: Recommended PCB Layouts Per View Z ◄► Z

Size 1-4	Size 1-7	Size 2-19
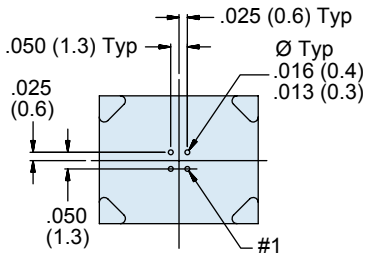	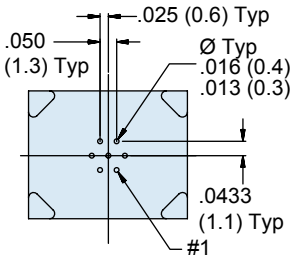	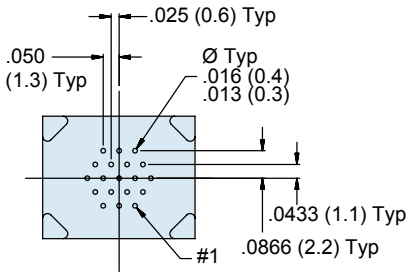
Size 3-37	**Size 4-44**	**Size 4-55**
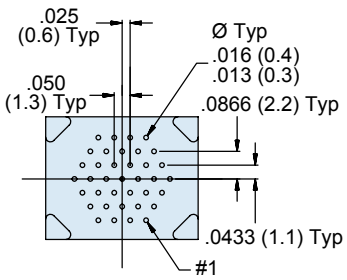	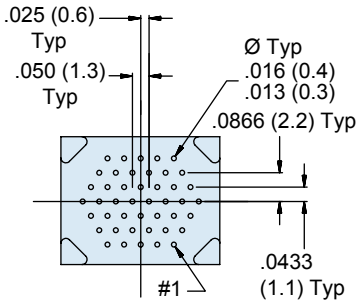	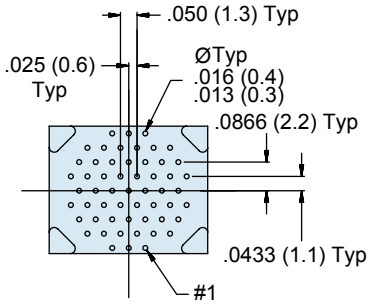

Dimensions in inches (millimeters) and are subject to change without notice.

© 2013 Glenair, Inc.

GLENAIR, INC. • 1211 AIR WAY • GLENDALE, CA 91201-2497 • 818-247-6000 • FAX 818-500-9912
www.glenair.com E-Mail: sales@glenair.com

890-016
Single Row Connector Saver

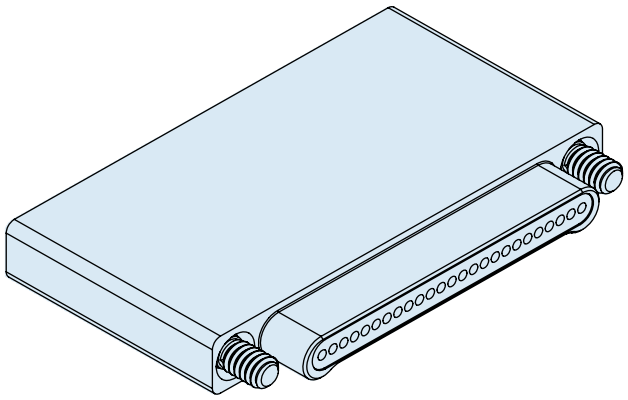

Glenair Connector Savers protect expensive connector contacts with Glenair Connector Savers. Once installed this device will reduce wear on vital contacts and eliminate downtime due to fowled or damaged connectors.

How To Order Nano Connectors with Insulated Wire					
Sample Part Number		**890-016**	**-15**	**US**	**P1**
Series	**890-016** – Single Row, Connector Saver				
Number of Contacts	**5, 9, 15, 21, 25, 31, 37, 51**				
Connector Type	**US** – Plug to Receptacle One Piece Shell				
Hardware	**P1** – Permanently Installed Jackscrew/Jackpost				

Materials/finishes

Aluminum alloy, electroless nickel plated per SAE-AMS-C-26074, Class 3 or 4, Grade B
Socket insulator - liquid crystal polymer (LCP) per MIL-M-24519 or ASTM D5138
Plug insulator - liquid crystal polymer (LCP) per MIL-M-24519 or ASTM D5138
Potting material - dexter hysol epoxy (Not shown)
Plug contact - gold alloy per ASTM B477 and ASTM B541
Socket contact - gold alloy per ASTM B477 and ASTM B541
Wire - 30 AWG gold plated copper alloy (not shown)
Emerson & Cuming conductive epoxy
Jackscrew/jackpost combination - corrosion resistant steel I.A.W. ASTM A484 and ASTM A582
Jackscrew retainer - corrosion resistant steel I.A.W. ASTM A484 and ASTM A582 (Not Shown)

Notes

1. Jackpost head of item 9 has a slot drive. Use a slotted blade miniature screwdriver with a .080" wide blade to turn.
2. Jackscrew/jackpost recommended torque: 0.5 - 1.0 In-lbs.

Dimensions in inches (millimeters) and are subject to change without notice.

© 2013 Glenair, Inc.

GLENAIR, INC. • 1211 AIR WAY • GLENDALE, CA 91201-2497 • 818-247-6000 • FAX 818-500-9912
www.glenair.com E-Mail: sales@glenair.com

890-016
Single Row Connector Saver

Table I: Single Row Nano Connector Saver Dimensions

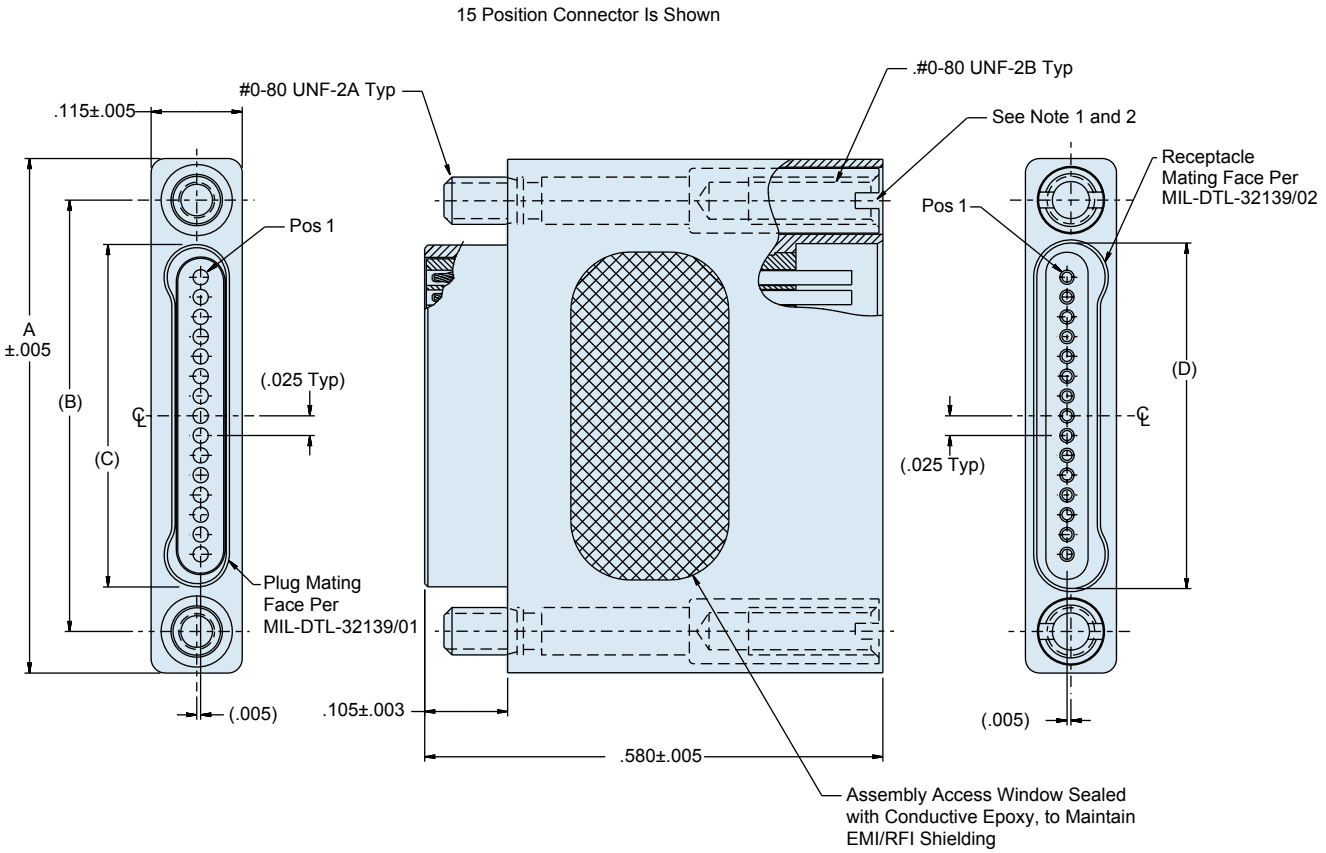

Number Of Contacts	A	B Ref	C Ref	D Ref
5	0.400	0.295	0.184	0.185
9	0.500	0.395	0.284	0.285
15	0.650	0.545	0.434	0.435
21	0.800	0.695	0.584	0.585
25	0.900	0.795	0.684	0.685
31	1.050	0.945	0.834	0.835
37	1.200	1.095	0.984	0.985
51	1.550	1.445	1.334	1.335

Dimensions in inches (millimeters) and are subject to change without notice.

© 2013 Glenair, Inc.

GLENAIR, INC. • 1211 AIR WAY • GLENDALE, CA 91201-2497 • 818-247-6000 • FAX 818-500-9912
www.glenair.com E-Mail: sales@glenair.com

890-001 and 890-002 Single Row Nano Connector with Insulated Wire

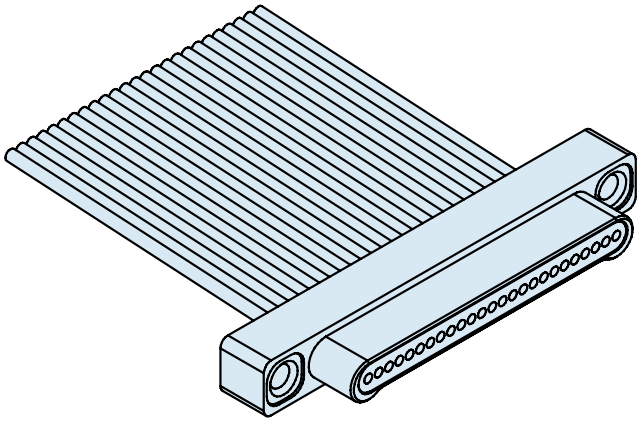

Glenair Insulated Wire Nano Connectors feature gold alloy TwistPin contacts. Contacts are precision-crimped to insulated, stranded wire. These nanomimiature connectors offer premium performance and reliability for demanding applications. Contact spacing is .025 inches. 1 amp current rating, DWV rating 250 volts AC. Wire gages #30 and #32 AWG.

TwistPin Contact System assures premium performance in demanding environments. The gold/platinum alloy contacts will stand up to years of exposure without corrosion.

Typical Applications include UAV's, satellites, missile systems and geophysical instruments.

How To Order Nano Connectors with Insulated Wire

Sample Part Number	890-002	-9S	A1	-0	A	1	-12	J
Series	**890-001** – Plug, Pin Contacts, Single Row, Nanominiature **890-002** – Receptacle, Socket Contacts, Single Row, Nanominiature							
Insert Arrangement/ Contact Type	Plugs (890-001): **5P, 9P, 15P, 21P, 25P, 31P, 37P, 51P** Receptacles (890-002): **5S, 9S, 15S, 21S, 25S, 31S, 37S, 51S**							
Shell Material and Finish	**A1** - Aluminum Shell, Cadmium Plating **A2** - Aluminum Shell, Electroless Nickel Plating **T** - Titanium Shell, Unplated **S** - Stainless Steel Shell, Passivated							
Wire Gage	**0** #30 AWG **2** #32 AWG							
Wire Type	**A** - Ultralightweight XLETFE Insulation, Silver-Coated Ultrahigh-Strength Copper (Not available for #32 AWG) **B** - Extruded PTFE Insulation, NEMA HP3-ETX (MIL-W-16878/6) **C** - Cross-Linked Modified ETFE Insulation, MIL-W-22759/33 (Not available for #32 AWG)							
Wire Color Code	**1** - White **2** - Yellow **7** - 10 Color Repeating (wire type A is striped, types B and C are solid colors)							
Wire Length Inches	**12** = 12.00 + 1.00 inches.							
Hardware	**J** - Jackscrew, #0-80 **T** - Female Thread, #0-80 Female threads are available on plug connectors only if the shell material is titanium or stainless steel.							

Plug (Pin) Connector		Receptacle (Socket) Connector	
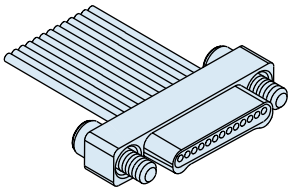	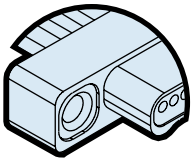	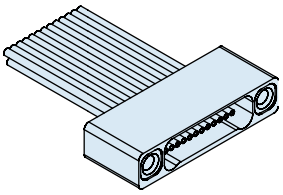	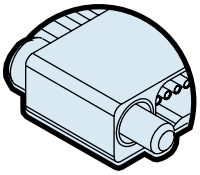
"J" Jackscrew Option	"T" Female Thread Option Titanium or Stainless Steel Shells Only	"T" Female Thread Option	"J" Jackscrew Option

Dimensions in inches (millimeters) and are subject to change without notice.

© 2013 Glenair, Inc.

GLENAIR, INC. • 1211 AIR WAY • GLENDALE, CA 91201-2497 • 818-247-6000 • FAX 818-500-9912
www.glenair.com E-Mail: sales@glenair.com

890-001 and 890-002 Single Row Nano Connector with Insulated Wire

Table I: Single Row Nano Insulated Wire Dimensions

890-001 Plug (Pin) Connector

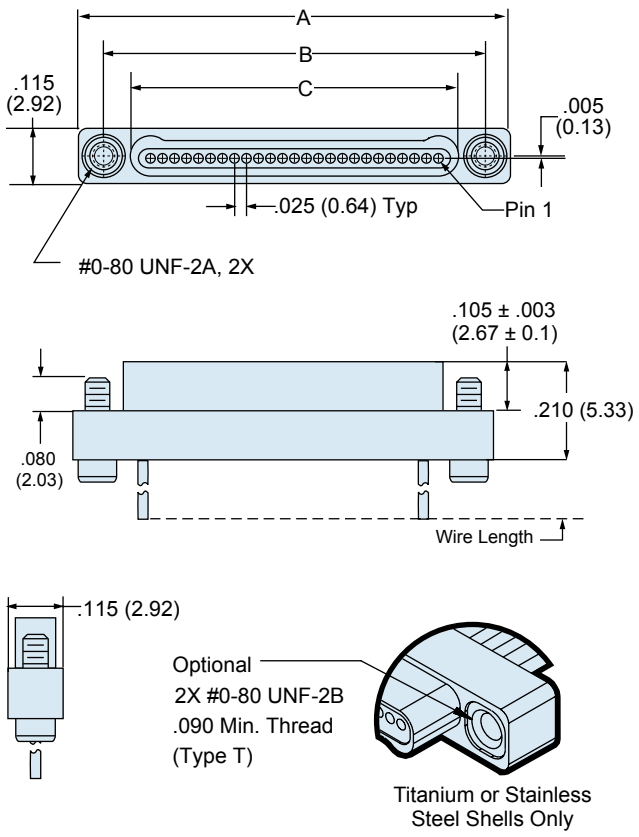

890-002 Receptacle (Socket) Connector

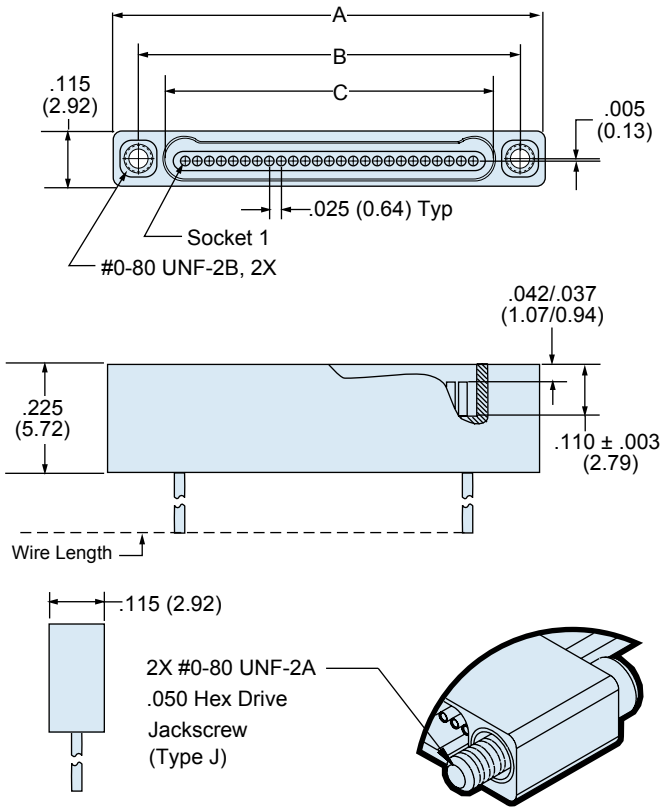

Layout	A		B BSC.		C BSC.	
	In. ± .005	mm. ± 0.13	In.	mm.	In.	mm.
5P	.400	10.16	.295	7.49	.184	4.67
5S	.400	10.16	.295	7.49	.185	4.70
9P	.500	12.70	.395	10.03	.284	7.21
9S	.500	12.70	.395	10.03	.285	7.24
15P	.650	16.51	.545	13.84	.434	11.02
15S	.650	16.51	.545	13.84	.435	11.05
21P	.800	20.32	.695	17.65	.584	14.83
21S	.800	20.32	.695	17.65	.585	14.86
25P	.900	22.86	.795	20.19	.684	17.37
25S	.900	22.86	.795	20.19	.685	17.40
31P	1.050	26.67	.945	24.00	.834	21.18
31S	1.050	26.67	.945	24.00	.835	21.21
37P	1.200	30.48	1.095	27.81	.984	24.99
37S	1.200	30.48	1.095	27.81	.985	24.02
51P	1.550	39.37	1.445	36.70	1.334	33.88
51S	1.550	39.37	1.445	36.70	1.335	33.91

Dimensions in inches (millimeters) and are subject to change without notice.

© 2013 Glenair, Inc.

GLENAIR, INC. • 1211 AIR WAY • GLENDALE, CA 91201-2497 • 818-247-6000 • FAX 818-500-9912
www.glenair.com E-Mail: sales@glenair.com

890-003 and 890-004 Single Row Nano Connector with Uninsulated Wire

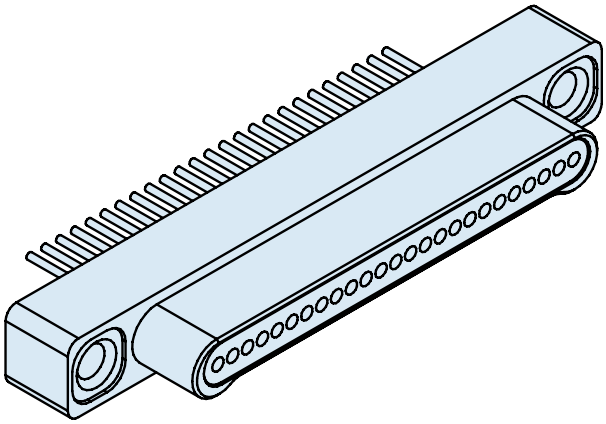

Glenair Uninsulated Wire Nano Connectors feature gold alloy TwistPin contacts. Contacts are precision-crimped to solid wire. These nanomimiature connectors offer premium performance and reliability for demanding applications. Contact spacing is .025 inches. 1 amp current rating, DWV rating 250 volts AC. Wire gages #30 and #32 AWG.

TwistPin Contact System assures premium performance in demanding environments. The gold/platinum alloy contacts will stand up to years of exposure without corrosion.

Typical Applications include UAV's, satellites, missile systems and geophysical instruments.

How to Order Nano Connectors with Uninsulated Wire

Sample Part Number	890-003	-31P	A2	-0	D3	-.250	J
Series	**890-003** Plug, Pin Contacts, Single Row, Nanominiature **890-004** Receptacle, Socket Contacts, Single Row, Nanominiature						
Insert Arrangement/ Contact Type	Plugs (890-003): **5P, 9P, 15P, 21P, 25P, 31P, 37P, 51P** Receptacles (890-004): **5S, 9S, 15S, 21S, 25S, 31S, 37S, 51S**						
Shell Material and Finish	**A1** - Aluminum Shell, Cadmium Plating **T** - Titanium Shell, Unplated **A2** - Aluminum Shell, Electroless Nickel Plating **S** - Stainless Steel Shell, Passivated						
Wire Gage	**0** - #30 AWG **2** - #32 AWG						
Wire Type	**D3** - Single Strand Copper Wire, Uninsulated, with Gold Plating						
Wire Length Inches	**.125, .250, .375, .500** Wire Length in Inches						
Hardware	**J** - Jackscrew, #0-80 **T** - Female Thread, #0-80 Female threads are available on plug connectors only if the shell material is titanium or stainless steel.						

Plug (Pin) Connector		Receptacle (Socket) Connector	
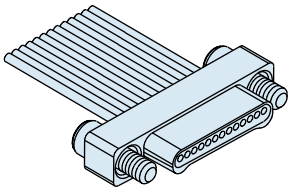	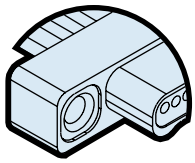	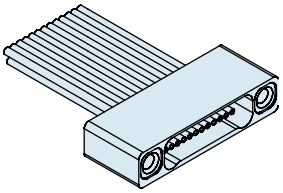	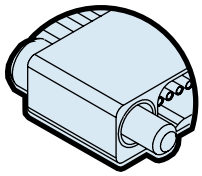
"J" Jackscrew Option	"T" Female Thread Option Titanium or Stainless Steel Shells Only	"T" Female Thread Option	"J" Jackscrew Option

Dimensions in inches (millimeters) and are subject to change without notice.

© 2013 Glenair, Inc.

GLENAIR, INC. • 1211 AIR WAY • GLENDALE, CA 91201-2497 • 818-247-6000 • FAX 818-500-9912
www.glenair.com E-Mail: sales@glenair.com

890-003 and 890-004 Single Row Nano Connector with Uninsulated Wire

Table 1: Single Row Nano Uninsulated Wire Dimensions

890-003 Plug (Pin) Connector

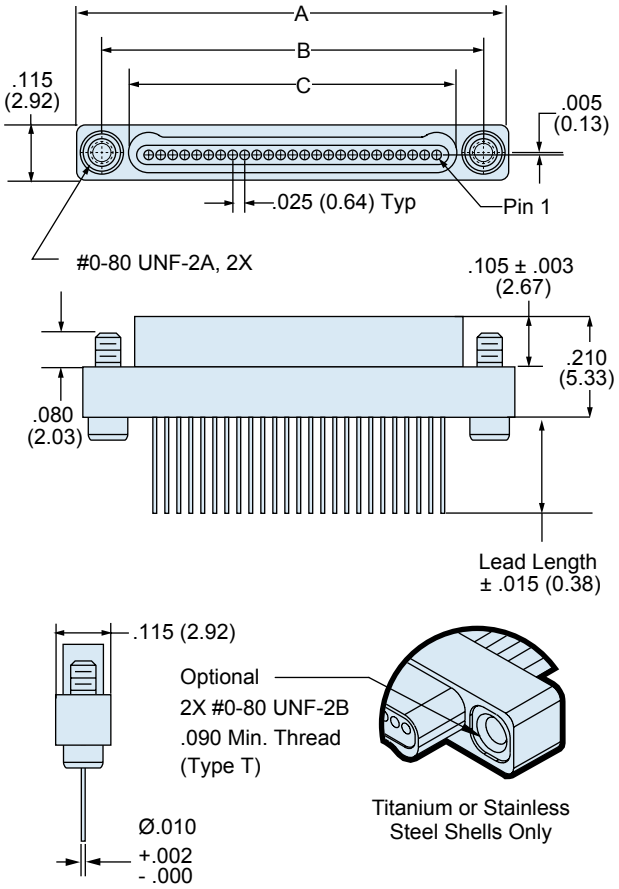

890-004 Receptacle (Socket) Connector

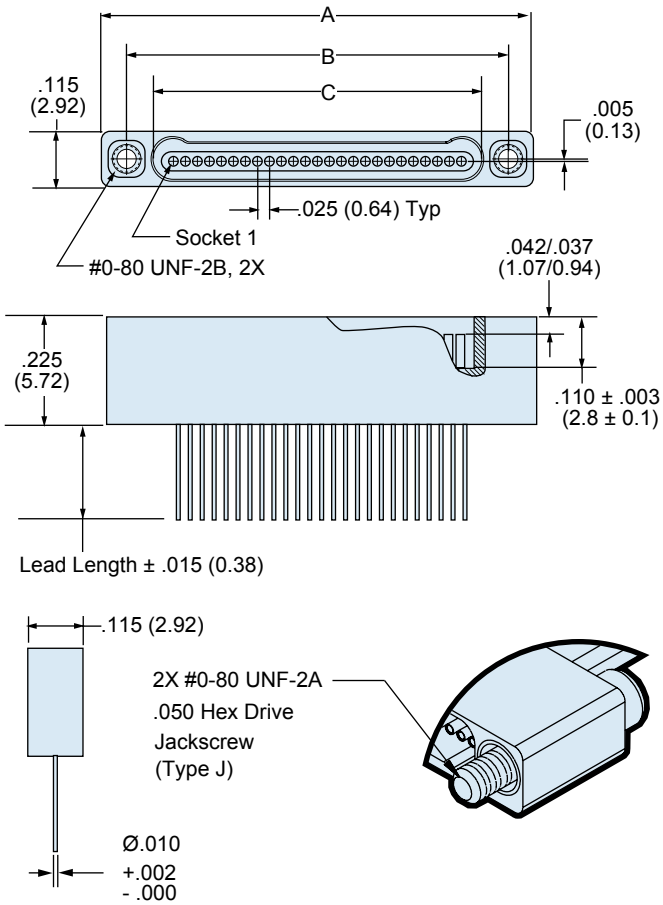

Layout	A		B BSC.		C BSC.	
	In. ± .005	mm. ± 0.13	In.	mm.	In.	mm.
5P	.400	10.16	.295	7.49	.184	4.67
5S	.400	10.16	.295	7.49	.185	4.70
9P	.500	12.70	.395	10.03	.284	7.21
9S	.500	12.70	.395	10.03	.285	7.24
15P	.650	16.51	.545	13.84	.434	11.02
15S	.650	16.51	.545	13.84	.435	11.05
21P	.800	20.32	.695	17.65	.584	14.83
21S	.800	20.32	.695	17.65	.585	14.86
25P	.900	22.86	.795	20.19	.684	17.37
25S	.900	22.86	.795	20.19	.685	17.40
31P	1.050	26.67	.945	24.00	.834	21.18
31S	1.050	26.67	.945	24.00	.835	21.21
37P	1.200	30.48	1.095	27.81	.984	24.99
37S	1.200	30.48	1.095	27.81	.985	24.02
51P	1.550	39.37	1.445	36.70	1.334	33.88
51S	1.550	39.37	1.445	36.70	1.335	33.91

Dimensions in inches (millimeters) and are subject to change without notice.

© 2013 Glenair, Inc.

GLENAIR, INC. • 1211 AIR WAY • GLENDALE, CA 91201-2497 • 818-247-6000 • FAX 818-500-9912
www.glenair.com E-Mail: sales@glenair.com

890-005
Single Row Nano Back-To-Back Connector

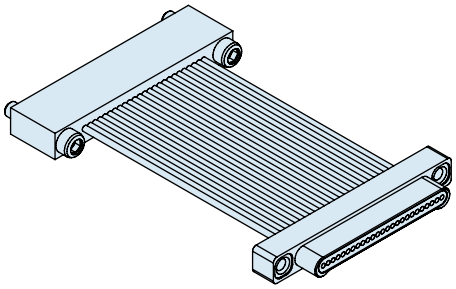

Glenair Back-To-Back Nano Connectors feature gold alloy TwistPin contacts. Contacts are precision-crimped to insulated, stranded wire. These nanomimiature connectors offer premium performance and reliability for demanding applications. Contact spacing is .025 inches. 1 amp current rating, DWV rating 250 volts AC. Wire gages #30 and #32 AWG.

TwistPin Contact System assures premium performance in demanding environments. The gold/platinum alloy contacts will stand up to years of exposure without corrosion.

How to Order Nano Back-To-Back Connectors

Sample Part Number	890-005	-9	GP	A1	-0	A	1	-12	JP

Series	**890-005** Back-To-Back Cables, Single Row, Nanominiature
Number of Contacts	**5, 9, 15, 21, 25, 31, 37, 51**
Connector Type	**GP** - Plug (Pin) Connector on Both Ends **GS** - Receptacle (Socket) Connector on Both Ends **CS** - Plug (Pin) On One End, Receptacle On The Other End
Shell Material and Finish	**A1** - Aluminum Shell, Cadmium Plating **A2** - Aluminum Shell, Electroless Nickel Plating **T** - Titanium Shell, Unplated **S** - Stainless Steel Shell, Passivated
Wire Gage	**0** - #30 AWG **2** - #32 AWG
Wire Type	**A** - Ultralightweight XLETFE Insulation, Silver-Coated Ultrahigh-Strength Copper (Not available for #32 gage) **B** - Extruded PTFE Insulation, NEMA HP3-ETX (MIL-W-16878/6) **C** - Cross-Linked Modified ETFE Insulation, MIL-W-22759/33 (Not available for #32 AWG)
Wire Color Code	**1** - White **2** - Yellow **7** - 10 Color Repeating (wire type A is striped, types B and C are solid colors)
Length Inches	**Overall Length** In Inches Including Connectors Example: "12" specifies 12 inches OAL
Hardware	**JJ** - Jackscrews on both ends (GP, GS, CS) **JT** - Jackscrews on plug, threaded holes on receptacle (CS) **JP** - Jackscrews on plug, threaded holes on plug (GP) (*See Note at Right) **TJ** - Jackscrews on receptacle, threaded holes on plug (CS) (*See Note at Right) **JR** - Jackscrews on receptacle, threaded holes on receptacle (GS) **TT** - Threaded holes both ends (GP, GS, CS) (*See Note at Right) * Specify titanium or stainless steel shells when ordering plugs with female threads

Plug (Pin) Connector		Receptacle (Socket) Connector	
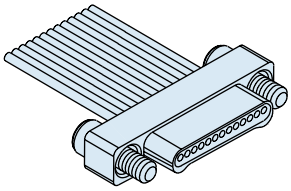 "J" Jackscrew Option	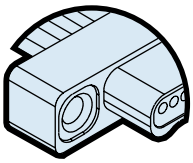 "T" Female Thread Option Titanium or Stainless Steel Shells Only	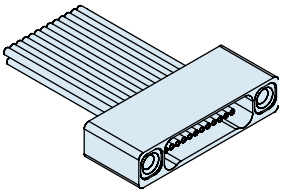 "T" Female Thread Option	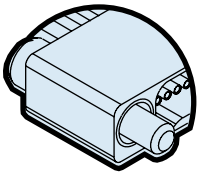 "J" Jackscrew Option

© 2013 Glenair, Inc.

GLENAIR, INC. • 1211 AIR WAY • GLENDALE, CA 91201-2497 • 818-247-6000 • FAX 818-500-9912
www.glenair.com E-Mail: sales@glenair.com

890-005 Single Row Nano Back-To-Back Connector

Table I: Single Row Nano Back-To-Back Dimensions

Plug (Pin) Connectors

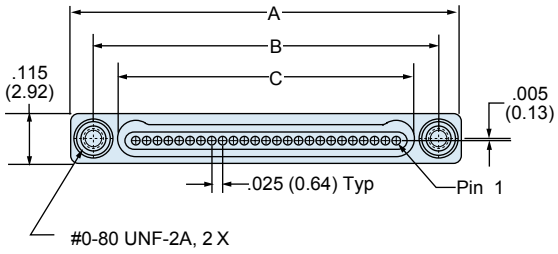

Receptaciel (Socket) Connectors

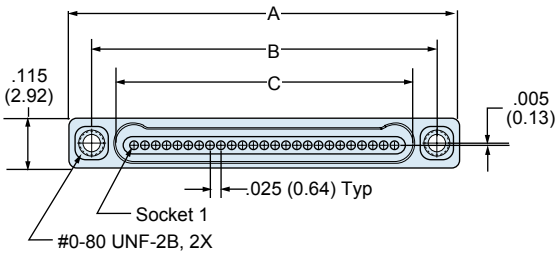

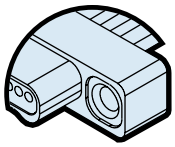

Plug with "T" Female Thread Option

Titanium or Stainless Steel Shells Only

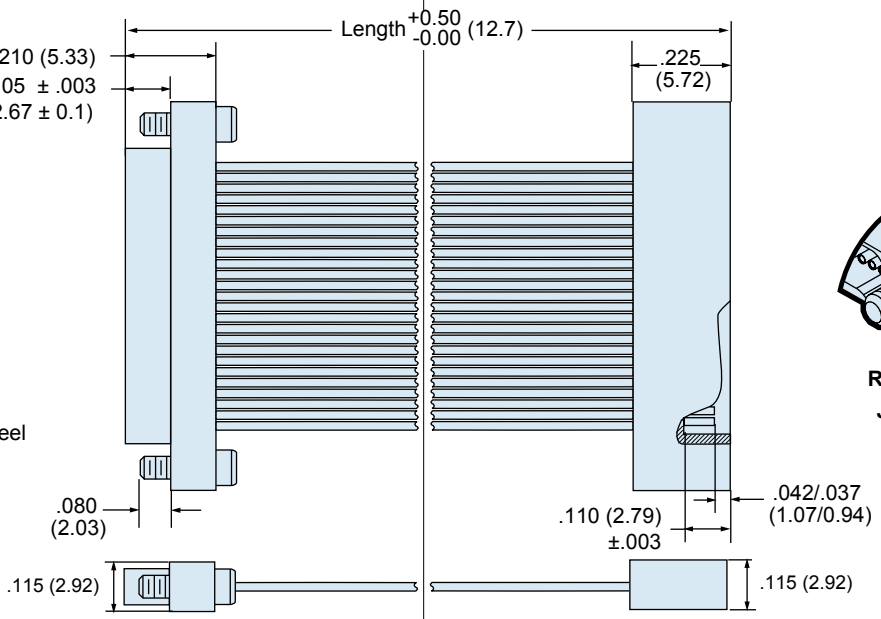

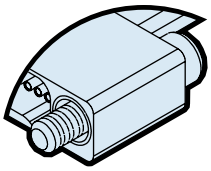

Receptacle With "J" Jackscrew Option

Layout	A		B BSC.		C BSC.	
	In. ± .005	mm. ± 0.13	In.	mm.	In.	mm.
5P	.400	10.16	.295	7.49	.184	4.67
5S	.400	10.16	.295	7.49	.185	4.70
9P	.500	12.70	.395	10.03	.284	7.21
9S	.500	12.70	.395	10.03	.285	7.24
15P	.650	16.51	.545	13.84	.434	11.02
15S	.650	16.51	.545	13.84	.435	11.05
21P	.800	20.32	.695	17.65	.584	14.83
21S	.800	20.32	.695	17.65	.585	14.86
25P	.900	22.86	.795	20.19	.684	17.37
25S	.900	22.86	.795	20.19	.685	17.40
31P	1.050	26.67	.945	24.00	.834	21.18
31S	1.050	26.67	.945	24.00	.835	21.21
37P	1.200	30.48	1.095	27.81	.984	24.99
37S	1.200	30.48	1.095	27.81	.985	24.02
51P	1.550	39.37	1.445	36.70	1.334	33.88
51S	1.550	39.37	1.445	36.70	1.335	33.91

Dimensions in inches (millimeters) and are subject to change without notice.

© 2013 Glenair, Inc.

GLENAIR, INC. • 1211 AIR WAY • GLENDALE, CA 91201-2497 • 818-247-6000 • FAX 818-500-9912
www.glenair.com E-Mail: sales@glenair.com

899-010
Single Row Nano Rectangular EMI Cover

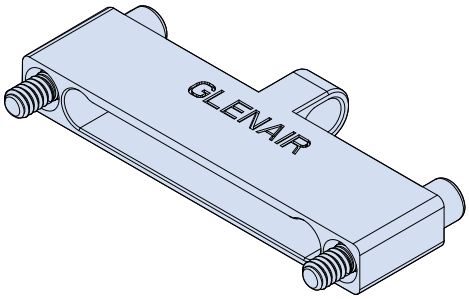

Glenair EMI Covers offer the same EMI protection as mated connectors, from electro magnetic interferance, as a result of electromagnetic induction emitted from intended external sources such as radio transmissions or electromagnetic radiation from unintentional sources such as electric power transmission lines. These covers feature a solid one piece construction machined from your choice of aluminum, stainless steel or titanium. Standard aluminum finishes include cadmium or electroless nickel plating. Available with or without lanyard attachment. Covers are in accordance with MIL-DTL-32139/1 and MIL-DTL-32139/2

How to Order Nano Single Row EMI Cover

Sample Part Number	899-010	-25	P	A2	J	F	3	-126

Series	**899-010** EMI Single Row, Nanominiature Cover
Insert Arrangement	**5, 9, 15, 21, 25, 31, 37, 51**; See Table II for dimensions
Body Style	**P** = Plug **S** = Receptacle
Cover Material and Finish	**A1** - Aluminum Shell, Cadmium Plating **S** - Stainless Steel, Passivated **A2** - Aluminum Shell, Electroless Nickel Plating **T** - Titanium, Unplated
Hardware	**J - Jacksrew** **T - Female Threaded** Female threads are available on plug covers only if cover material is titanium or stainless steel.
Attachment Type	**N** - No Lanyard **F** - Stainless Steel Wire Rope, Nylon jacket, Black, Ø .034 **G** - Flexible Nylon Rope, Ø .090 **H** - Stainless Steel Wire Rope, Teflon Jacket, Black, Ø .034
Attachment Length	Attachment Length in Inches (Omit for No Lanyard)
Attachment Diameter	See Table I; (Omit for No Lanyard)

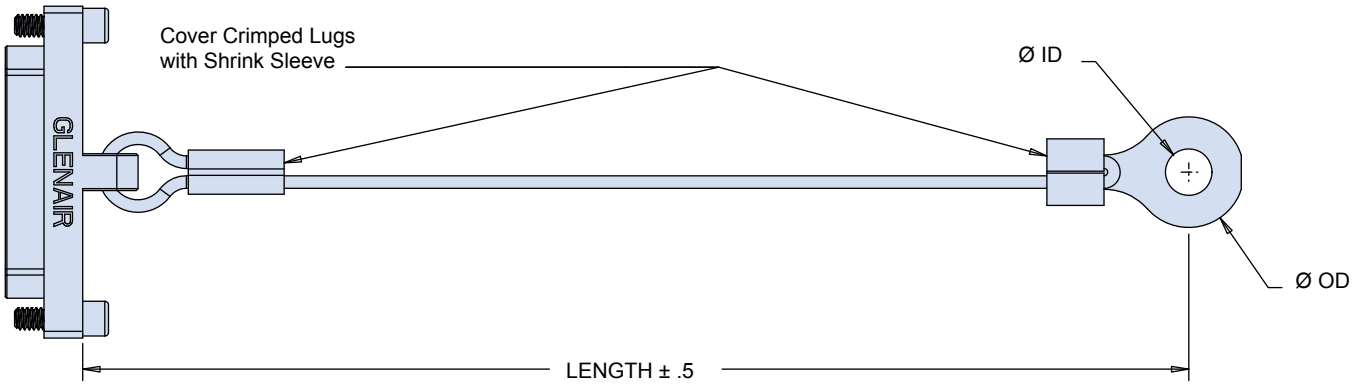

Table I: Attachment Diameter

Dash No.	-098	-126	-140	-156	-167	-188	-197	-218
ID	Ø .098 (2.49)	Ø .126 (3.20)	Ø.140 (3.56)	Ø.156 (3.96)	Ø .167 (4.24)	Ø.188 (4.78)	Ø.197 (5.00)	Ø.223/.218 (5.66/5.54)
OD	Ø .300 (7.62)	Ø .300 (7.62)	Ø .300 (7.62)	Ø .300 (7.62)	Ø .300 (7.62)	Ø .300 (7.62)	Ø .300 (7.62)	Ø .300 (7.62)

Dimensions in inches (millimeters) and are subject to change without notice.

© 2013 Glenair, Inc.

GLENAIR, INC. • 1211 AIR WAY • GLENDALE, CA 91201-2497 • 818-247-6000 • FAX 818-500-9912
www.glenair.com E-Mail: sales@glenair.com

899-010 Single Row Nano Rectangular EMI Cover

Table II: Single Row Nano Cover Dimensions

Plug Cover

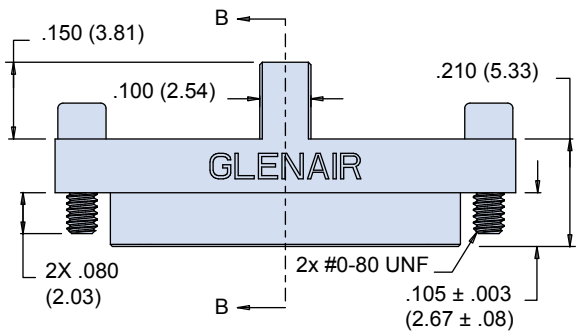

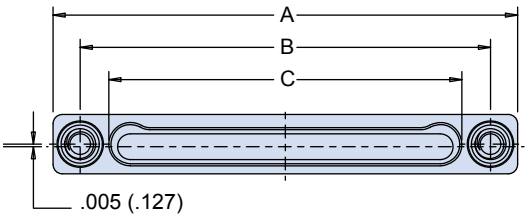

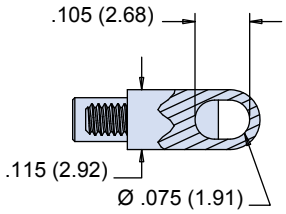

SECTION B-B
Plug

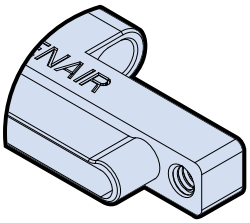

Plug with "T" Female Thread Option
Titanium or Stainless Steel Shells Only

Receptacle Cover

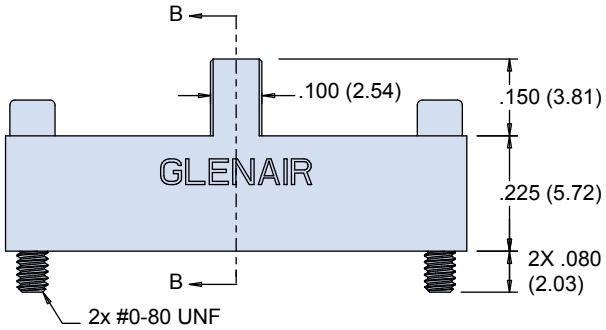

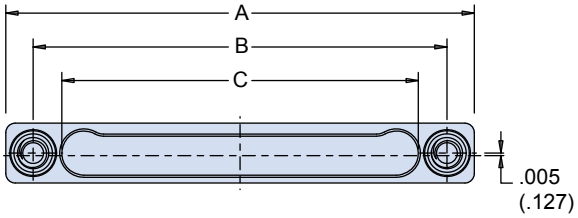

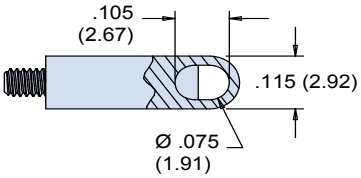

SECTION A-A
Receptacle

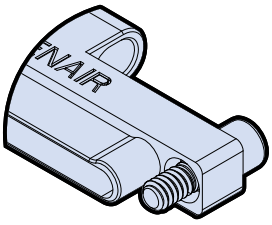

Receptacle With "J" Jackscrew Option

Size	A	B Bsc.	C Bsc.	Size	A	B Bsc.	C Bsc.
5P	0.400 (10.16)	0.295 (7.493)	0.184 (4.67)	25P	0.900 (22.86)	0.795 (20.193)	0.684 (17.37)
5S	0.400 (10.16)	0.295 (7.493)	0.185 (4.70)	25S	0.900 (22.87)	0.795 (20.193)	0.685 (17.40)
9P	0.500 (12.7)	0.395 (10.033)	0.284 (7.21)	31P	1.050 (26.67)	0.945 (24.00)	0.834 (21.18)
9S	0.500 (12.7)	0.395 (10.033)	0.285 (7.24)	31S	1.050 (26.67)	0.945 (24.00)	0.835 (21.21)
15P	0.650 (16.51)	0.545 (13.84)	0.434 (11.02)	37P	1.200 (30.48)	1.095 (27.81)	0.984 (24.99)
15S	0.650 (16.51)	0.545 (13.84)	0.435 (11.50)	37S	1.200 (30.48)	1.095 (27.81)	0.985 (25.02)
21P	0.800 (20.32)	0.695 (17.65)	0.584 (14.83)	51P	1.550 (39.37)	1.445 (36.70)	1.334 (33.88)
21S	0.800 (20.32)	0.695 (17.65)	0.585 (14.86)	51S	1.550 (39.37)	1.445 (36.70)	1.335 (33.91)

Dimensions in inches (millimeters) and are subject to change without notice.

© 2013 Glenair, Inc.

GLENAIR, INC. • 1211 AIR WAY • GLENDALE, CA 91201-2497 • 818-247-6000 • FAX 818-500-9912
www.glenair.com E-Mail: sales@glenair.com

891-016
Dual Row Nano Connector Saver

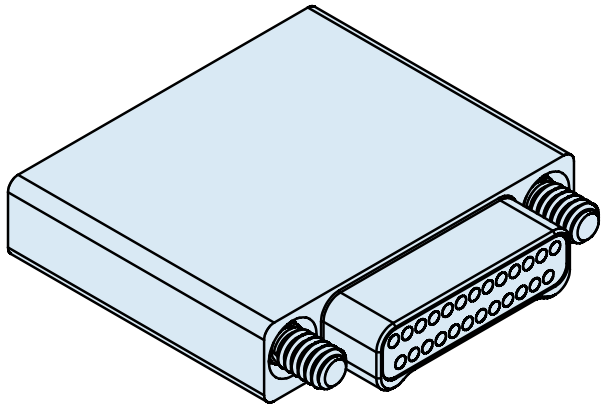

Glenair Connector Savers protect expensive connector contacts with Glenair Connector Savers. Once installed this device will reduce wear on vital contacts and eliminate downtime due to fowled or damaged connectors.

How to Order Nano Connectors					
Sample Part Number		**891-016**	**-31**	**US**	**P1**
Series	**891-016** Dual Row Connector Saver				
Number of Contacts	**9, 15, 21, 25, 31, 37, 51, 65, 69**				
Connector Type	**US** - Plug to Socket One Piece Shell				
Hardware	**P1** - Permanently Installed Jackscrew/Jackpost				

Materials/finishes

Aluminum alloy, electroless nickel plated per SAE-AMS-C-26074, Class 3 or 4, Grade B
Socket insulator - liquid crystal polymer (LCP) per MIL-M-24519 or ASTM D5138
Plug insulator - liquid crystal polymer (LCP) per MIL-M-24519 or ASTM D5138
Potting material - dexter hysol epoxy (Not shown)
Plug contact - gold alloy per ASTM B477 and ASTM B541
Socket contact - gold alloy per ASTM B477 and ASTM B541
Wire - 30 AWG gold plated copper alloy (not shown)
Emerson & Cuming conductive epoxy
Jackscrew/jackpost combination - corrosion resistant steel I.A.W. ASTM A484 and ASTM A582
Jackscrew retainer - corrosion resistant steel I.A.W. ASTM A484 and ASTM A582 (Not Shown)

Notes

1. Jackpost head of item 9 has a slot drive. Use a slotted blade miniature screwdriver with a .080" wide blade to turn.
2. Jackscrew/jackpost recommended torque: 0.5 - 1.0 In-lbs.

Dimensions in inches (millimeters) and are subject to change without notice.

© 2013 Glenair, Inc.

GLENAIR, INC. • 1211 AIR WAY • GLENDALE, CA 91201-2497 • 818-247-6000 • FAX 818-500-9912
www.glenair.com E-Mail: sales@glenair.com

891-016
Dual Row Nano Connector Saver

Dual Row Nano Connector Saver

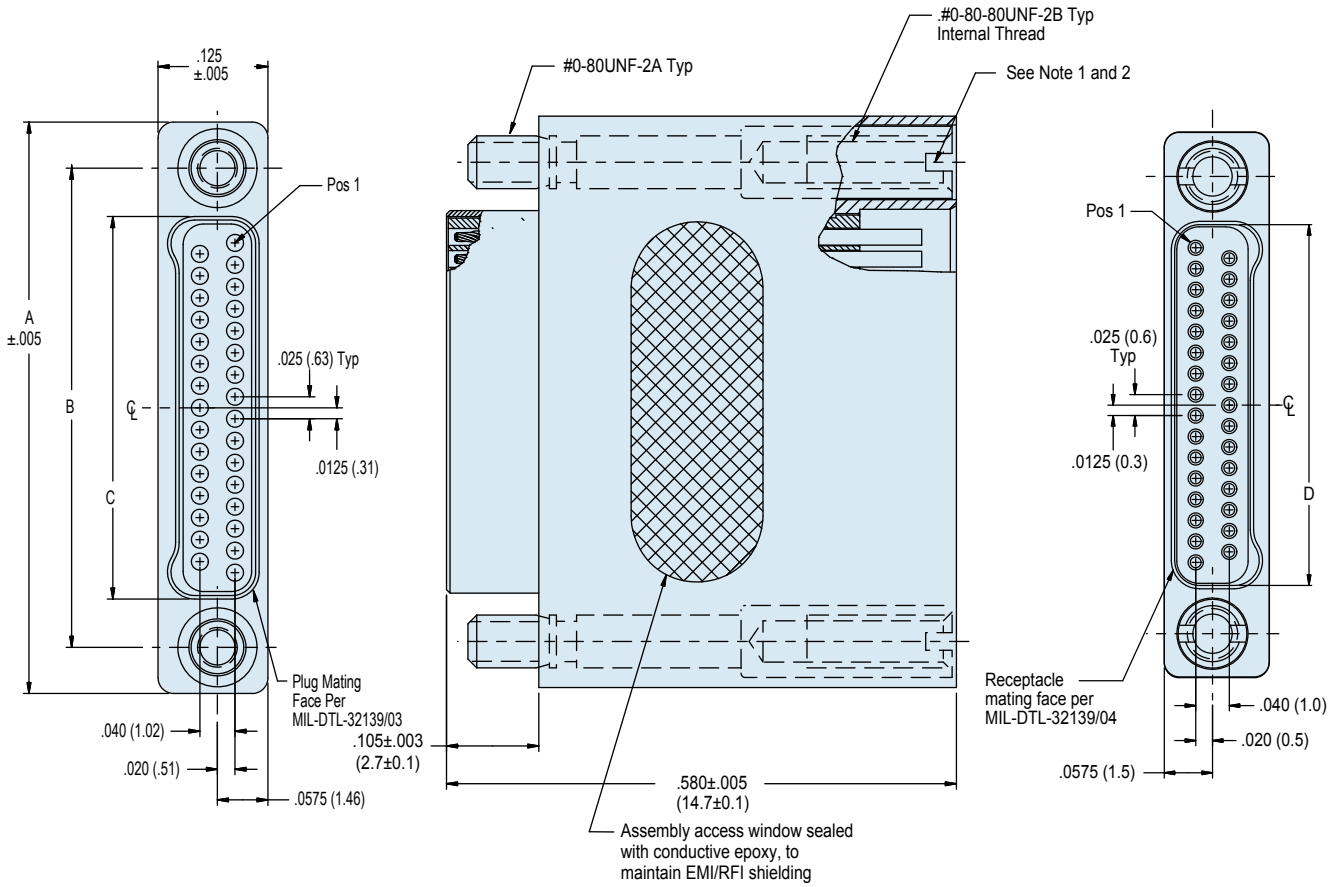

31 Position Connector is Shown

Number of Contacts	A	B Ref	C Ref	D Ref
9	0.375 (9.5)	0.270 (6.9)	0.160 (4.1)	0.163 (4.1)
15	0.450 (11.4)	0.345 (8.8)	0.235 (6.0)	0.238 (6.0)
21	0.525 (13.3)	0.420 (10.7)	0.310 (7.9)	0.313 (8.0)
25	0.575 (14.6)	0.470 (11.9)	0.360 (9.1)	0.363 (9.2)
31	0.650 (16.5)	0.545 (13.8)	0.435 (11.0)	0.438 (11.1)
37	0.725 (18.4)	0.620 (15.7)	0.510 (13.0)	0.513 (13.0)
51	0.900 (22.9)	0.795 (20.2)	0.685 (17.4)	0.688 (17.5)
65	1.075 (27.3)	0.970 (24.6)	0.860 (21.8)	0.863 (21.9)
69	1.125 (28.6)	1.020 (25.9)	0.910 (23.1)	0.913 (23.2)

Dimensions in inches (millimeters) and are subject to change without notice.

© 2013 Glenair, Inc.

GLENAIR, INC. • 1211 AIR WAY • GLENDALE, CA 91201-2497 • 818-247-6000 • FAX 818-500-9912
www.glenair.com E-Mail: sales@glenair.com

891-001 and 891-002
Dual Row Nano Connector with Insulated Wire

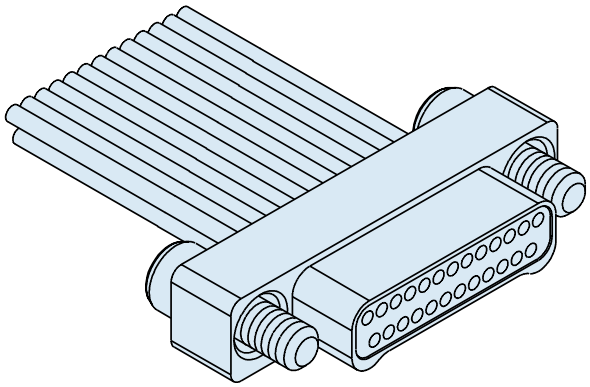

Glenair Insulated Wire Nano Connectors feature gold alloy TwistPin contacts. Contacts are precision-crimped to insulated, stranded wire. These nanomimiature connectors offer premium performance and reliability for demanding applications. Contact spacing is .025 inches. 1 amp current rating, DWV rating 250 volts AC. Wire gages #30 and #32 AWG.

TwistPin Contact System assures premium performance in demanding environments. The gold/platinum alloy contacts will stand up to years of exposure without corrosion.

Typical Applications include UAV's, satellites, missile systems and geophysical instruments.

How to Order Nano Connectors with Insulated Wire

Sample Part Number	891-002	-37S	A1	-0	A	1	-12	J
Series	**891-001** Plug, Pin Contacts, Dual Row, Nanominiature **891-002** Receptacle, Socket Contacts, Dual Row, Nanominiature							
Insert Arrangement/ Contact Type	Plugs (891-001): **9P, 15P, 21P, 25P, 31P, 37P, 51P, 65P, 69P, 85P** Receptacles (891-002): **9S, 15S, 21S, 25S, 31S, 37S, 51S, 65S, 69S, 85S**							
Shell Material and Finish	**A1** - Aluminum Shell, Cadmium Plating **T** - Titanium Shell, Unplated **A2** - Aluminum Shell, Electroless Nickel Plating **S** - Stainless Steel Shell, Passivated							
Wire Gage	**0** - #30 AWG **2** - #32 AWG							
Wire Type	**A** - Ultralightweight XLETFE Insulation, Silver-Coated Ultrahigh-Strength Copper (Not available for #32 AWG) **B** - Extruded PTFE Insulation, NEMA HP3-ETX (MIL-W-16878/6) **C** - Cross-Linked Modified ETFE Insulation, MIL-W-22759/33 (Not available for #32 AWG)							
Wire Color Code	**1** - White **2** - Yellow **7** - 10 Color Repeating (wire type **A** is striped, types **B** and **C** are solid colors)							
Wire Length Inches	**12** = 12.00 + 1.00 inches							
Hardware	**J** - Jackscrew **T** - Female Threads Female threads are available on plug connectors only if the shell material is titanium or stainless steel.							

Plug (Pin) Connector		Receptacle (Socket) Connector	
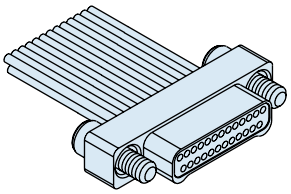	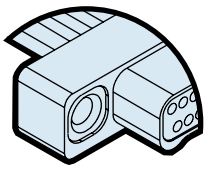	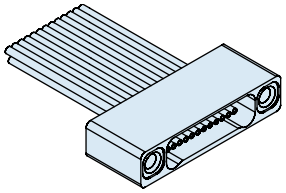	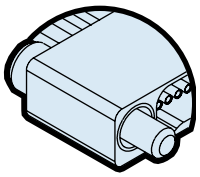
"J" Jackscrew Option	"T" Female Thread Option Titanium or Stainless Steel Shells Only	"T" Female Thread Option	"J" Jackscrew Option

Dimensions in inches (millimeters) and are subject to change without notice.

© 2013 Glenair, Inc.

GLENAIR, INC. • 1211 AIR WAY • GLENDALE, CA 91201-2497 • 818-247-6000 • FAX 818-500-9912
www.glenair.com E-Mail: sales@glenair.com

891-001 and 891-002
Dual Row Nano Connector with Insulated Wire

Table 1: Dual Row Nano Insulated Wire Dimensions

891-001 Plug (Pin) Connector

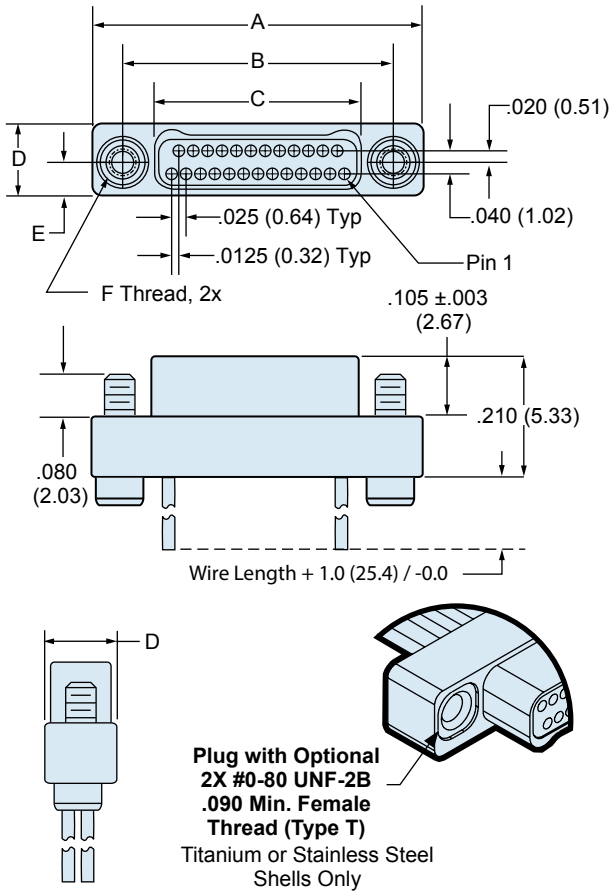

891-002 Receptacle (Socket) Connector

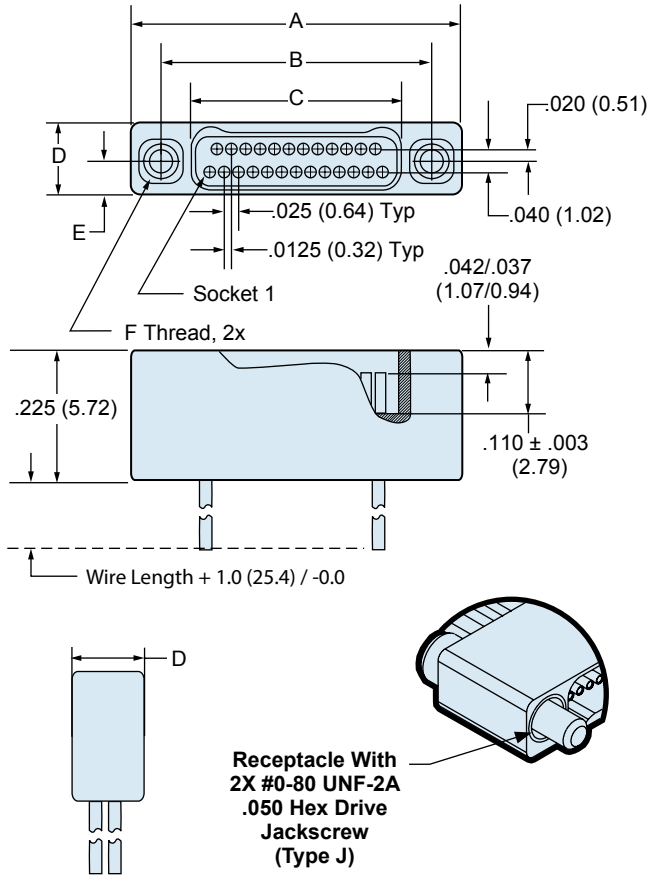

Layout	A		B BSC.		C BSC.		D		E BSC.		F Thread
	In. ± .005	mm. ± 0.13	In.	mm.	In.	mm.	In. ±.005	mm ±0.13	In.	mm	
9P	.375	9.52	.270	6.86	.160	4.06	.125	3.18	.0575	1.46	#0-80 UNF
9S	.375	9.52	.270	6.86	.163	4.14	.125	3.18	.0575	1.46	#0-80 UNF
15P	.450	11.43	.345	8.76	.235	5.97	.125	3.18	.0575	1.46	#0-80 UNF
15S	.450	11.43	.345	8.76	.238	6.04	.125	3.18	.0575	1.46	#0-80 UNF
21P	.525	13.33	.420	10.67	.310	7.87	.125	3.18	.0575	1.46	#0-80 UNF
21S	.525	13.33	.420	10.67	.313	7.95	.125	3.18	.0575	1.46	#0-80 UNF
25P	.575	14.60	.470	11.94	.360	9.14	.125	3.18	.0575	1.46	#0-80 UNF
25S	.575	14.60	.470	11.94	.363	9.22	.125	3.18	.0575	1.46	#0-80 UNF
31P	.650	16.51	.545	13.84	.435	11.05	.125	3.18	.0575	1.46	#0-80 UNF
31S	.650	16.51	.545	13.84	.438	11.12	.125	3.18	.0575	1.46	#0-80 UNF
37P	.725	18.41	.620	15.75	.510	12.95	.125	3.18	.0575	1.46	#0-80 UNF
37S	.725	18.41	.620	15.75	.513	13.03	.125	3.18	.0575	1.46	#0-80 UNF
51P	.900	22.86	.795	20.19	.685	17.40	.125	3.18	.0575	1.46	#0-80 UNF
51S	.900	22.86	.795	20.19	.688	17.47	.125	3.18	.0575	1.46	#0-80 UNF
65P	1.075	27.30	.970	24.64	.860	21.84	.125	3.18	.0575	1.46	#0-80 UNF
65S	1.075	27.30	.970	24.64	.863	21.92	.125	3.18	.0575	1.46	#0-80 UNF
69P	1.125	28.57	1.020	25.91	.910	23.11	.125	3.18	.0575	1.46	#0-80 UNF
69S	1.125	28.57	1.020	25.91	.913	23.19	.125	3.18	.0575	1.46	#0-80 UNF
85P	1.377	34.97	1.246	31.65	1.110	28.19	.150	3.81	.070	1.78	#2-56 UNC
85S	1.377	34.97	1.246	31.65	1.113	28.27	.150	3.81	.070	1.78	#2-56 UNC

Dimensions in inches (millimeters) and are subject to change without notice.

© 2013 Glenair, Inc.

GLENAIR, INC. • 1211 AIR WAY • GLENDALE, CA 91201-2497 • 818-247-6000 • FAX 818-500-9912
www.glenair.com E-Mail: sales@glenair.com

891-003 and 891-004
Dual Row Nano Connector with Uninsulated Wire

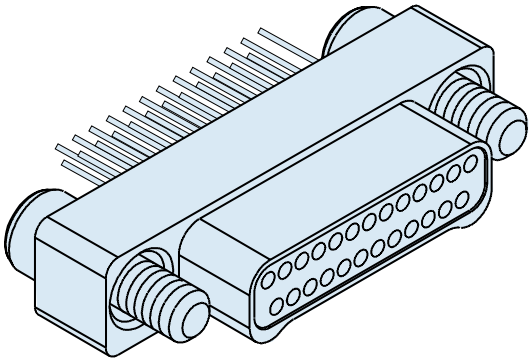

Glenair Nano Connectors feature gold alloy TwistPin contacts. Contacts are precision-crimped to solid wire. These nanomimiature connectors offer premium performance and reliability for demanding applications. Contact spacing is .025 inches. 1 amp current rating, DWV rating 250 volts AC. Wire gages #30 and #32 AWG.

TwistPin Contact System assures premium performance in demanding environments. The gold/platinum alloy contacts will stand up to years of exposure without corrosion.

Typical Applications include UAV's, satellites, missile systems and geophysical instruments.

How to Order Nano Connectors with Uninsulated Wire

Sample Part Number	891-003	-9P	A1	-0	D3	-.125	J
Series	**891-003** Plug, Pin Contacts, Dual Row, Nanominiature, Uninsulated Wire **891-004** Receptacle, Socket Contacts, Dual Row, Nanominiature, Uninsulated Wire						
Insert Arrangement/ Contact Type	Plugs (891-003): **9P, 15P, 21P, 25P, 31P, 37P, 51P, 65P, 69P, 85P** Receptacles (891-004): **9S, 15S, 21S, 25S, 31S, 37S, 51S, 65S, 69S, 85S**						
Shell Material and Finish	**A1** - Aluminum Shell, Cadmium Plating **A2** - Aluminum Shell, Electroless Nickel Plating **T** - Titanium Shell, Unplated **S** - Stainless Steel Shell, Passivated						
Wire Gage	**0** - #30 AWG **2** - #32 AWG						
Wire Type	**D3** - Single Strand Copper Wire, Uninsulated, with Gold Plating						
Wire Length	**.125**, **.250**, **.375**, **.500**, Wire Length in Inches						
Hardware	**J** - Jackscrew **T** - Female Thread Female Threads are available on plug connectors only if the shell material is titanium or stainless steel.						

Plug (Pin) Connector		Receptacle (Socket) Connector	
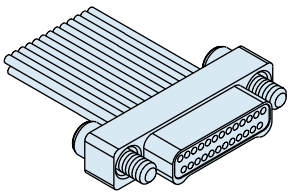	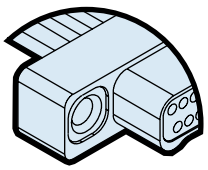	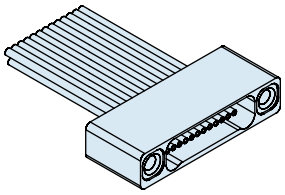	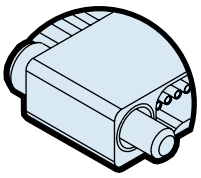
"J" Jackscrew Option	"T" Female Thread Option Titanium or Stainless Steel Shells Only	"T" Female Thread Option	"J" Jackscrew Option

Dimensions in inches (millimeters) and are subject to change without notice.

© 2013 Glenair, Inc.

GLENAIR, INC. • 1211 AIR WAY • GLENDALE, CA 91201-2497 • 818-247-6000 • FAX 818-500-9912
www.glenair.com E-Mail: sales@glenair.com

891-003 and 891-004
Dual Row Nano Connector with Uninsulated Wire

Table I: Dual Row Nano Dimensions

891-003 Plug (Pin) Connector

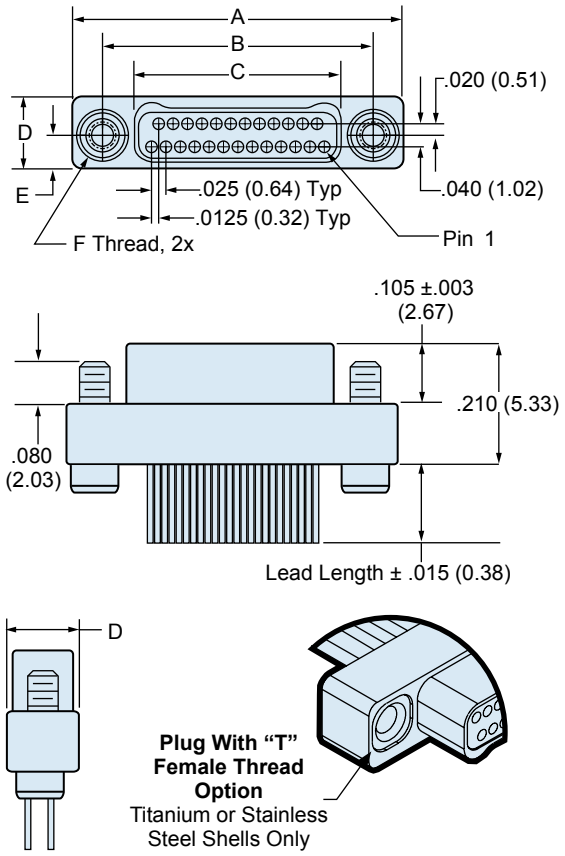

891-004 Receptacle (Socket) Connector

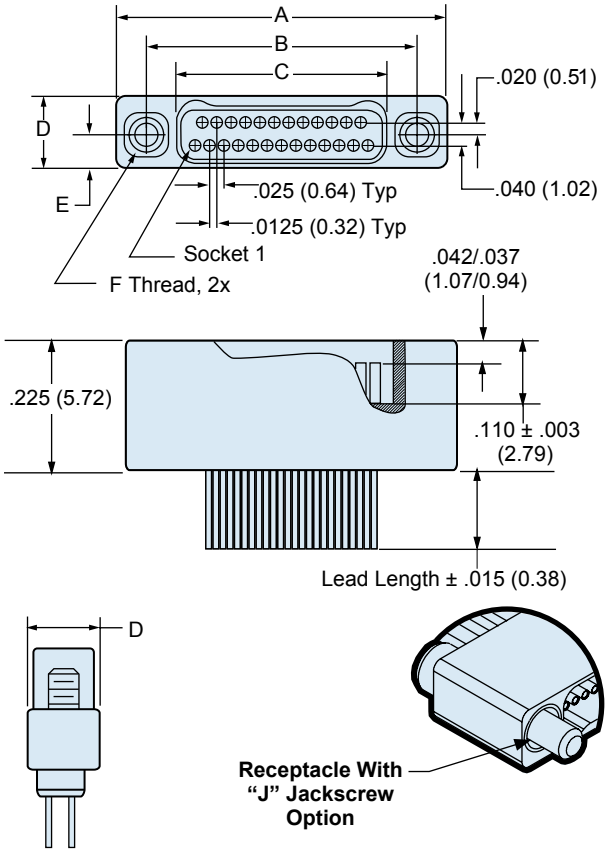

Layout	A		B BSC.		C BSC.		D		E BSC.		F Thread
	In. ± .005	mm. ± 0.13	In.	mm.	In.	mm.	In. ±.005	mm ±0.13	In.	mm	
9P	.375	9.52	.270	6.86	.160	4.06	.125	3.18	.0575	1.46	#0-80 UNF
9S	.375	9.52	.270	6.86	.163	4.14	.125	3.18	.0575	1.46	#0-80 UNF
15P	.450	11.43	.345	8.76	.235	5.97	.125	3.18	.0575	1.46	#0-80 UNF
15S	.450	11.43	.345	8.76	.238	6.04	.125	3.18	.0575	1.46	#0-80 UNF
21P	.525	13.33	.420	10.67	.310	7.87	.125	3.18	.0575	1.46	#0-80 UNF
21S	.525	13.33	.420	10.67	.313	7.95	.125	3.18	.0575	1.46	#0-80 UNF
25P	.575	14.60	.470	11.94	.360	9.14	.125	3.18	.0575	1.46	#0-80 UNF
25S	.575	14.60	.470	11.94	.363	9.22	.125	3.18	.0575	1.46	#0-80 UNF
31P	.650	16.51	.545	13.84	.435	11.05	.125	3.18	.0575	1.46	#0-80 UNF
31S	.650	16.51	.545	13.84	.438	11.12	.125	3.18	.0575	1.46	#0-80 UNF
37P	.725	18.41	.620	15.75	.510	12.95	.125	3.18	.0575	1.46	#0-80 UNF
37S	.725	18.41	.620	15.75	.513	13.03	.125	3.18	.0575	1.46	#0-80 UNF
51P	.900	22.86	.795	20.19	.685	17.40	.125	3.18	.0575	1.46	#0-80 UNF
51S	.900	22.86	.795	20.19	.688	17.47	.125	3.18	.0575	1.46	#0-80 UNF
65P	1.075	27.30	.970	24.64	.860	21.84	.125	3.18	.0575	1.46	#0-80 UNF
65S	1.075	27.30	.970	24.64	.863	21.92	.125	3.18	.0575	1.46	#0-80 UNF
69P	1.125	28.57	1.020	25.91	.910	23.11	.125	3.18	.0575	1.46	#0-80 UNF
69S	1.125	28.57	1.020	25.91	.913	23.19	.125	3.18	.0575	1.46	#0-80 UNF
85P	1.377	34.97	1.246	31.65	1.110	28.19	.150	3.81	.070	1.78	#2-56 UNC
85S	1.377	34.97	1.246	31.65	1.113	28.27	.150	3.81	.070	1.78	#2-56 UNC

Dimensions in inches (millimeters) and are subject to change without notice.

© 2013 Glenair, Inc.

GLENAIR, INC. • 1211 AIR WAY • GLENDALE, CA 91201-2497 • 818-247-6000 • FAX 818-500-9912
www.glenair.com E-Mail: sales@glenair.com

891-005
Dual Row Nano Back-to-Back Connector

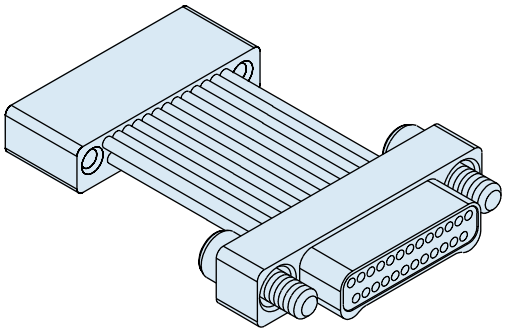

Glenair Back-To-Back Nano Connectors feature gold alloy TwistPin contacts. Contacts are precision-crimped to insulated, stranded wire. These nanomimiature connectors offer premium performance and reliability for demanding applications. Contact spacing is .025 inches. 1 amp current rating, DWV rating 250 volts AC. Wire gages #30 and #32 AWG.

TwistPin Contact System assures premium performance in demanding environments. The gold/platinum alloy contacts will stand up to years of exposure without corrosion.

How To Order Dual Row Back to Back Nano Connectors

Sample Part Number	891-005	-9	GP	A1	-0	A	1	-12	JJ

Series	**891-005** Back-To-Back Cables, Dual Row, Nanominiature
Number of Contacts	**9, 15, 21, 25, 31, 37, 51, 65, 69, 85**
Connector Type	**GP** - Plug (Pin) Connector on Both Ends **GS** - Receptacle (Socket) Connector on Both Ends **CS** - Plug (Pin) On One End, Receptacle On The Other End
Shell Material and Finish	**A1** - Aluminum Shell, Cadmium Plating **T** - Titanium Shell, Unplated **A2** - Aluminum Shell, Electroless Nickel Plating **S** - Stainless Steel Shell, Passivated
Wire Gage	**0** - #30 AWG **2** - #32 AWG
Wire Type	**A** - Ultralightweight XLETFE Insulation, Silver-Coated Ultrahigh-Strength Copper (Not available for #32 AWG) **B** - Extruded PTFE Insulation, NEMA HP3-ETX (MIL-W-16878/6) **C** - Cross-Linked Modified ETFE Insulation, MIL-W-22759/33 (Not available for #32 AWG)
Wire Color Code	**1** - White **2** - Yellow **7** - 10 Color Repeating (wire type **A** is striped, types **B** and **C** are solid colors)
Length Inches	**Overall Length** In Inches Including Connectors Example: "12" specifies 12 inches OAL
Hardware	**JJ** - Jackscrews on both ends (GP, GS, CS) **JT** - Jackscrews on plug, threaded holes on receptacle (CS) **JP** - Jackscrews on plug, threaded holes on plug (GP)(*See Note Below) **TJ** - Jackscrews on receptacle, threaded holes on plug (CS)(*See Note Below) **JR** - Jackscrews on receptacle, threaded holes on receptacle (GS) **TT** - Threaded holes both ends (GP, GS, CS)(*See Note Below) * Specify titanium or stainless steel shells when ordering plugs with female threads.

Plug (Pin) Connector		Receptacle (Socket) Connector	
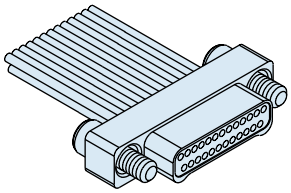	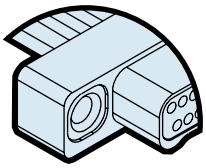	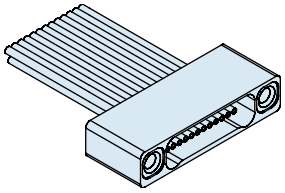	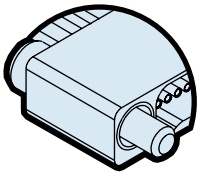
"J" Jackscrew Option	"T" Female Thread Option Titanium or Stainless Steel Shells Only	"T" Female Thread Option	"J" Jackscrew Option

Dimensions in inches (millimeters) and are subject to change without notice.

© 2013 Glenair, Inc.

GLENAIR, INC. • 1211 AIR WAY • GLENDALE, CA 91201-2497 • 818-247-6000 • FAX 818-500-9912
www.glenair.com E-Mail: sales@glenair.com

891-005
Dual Row Nano Back-to-Back Connector

Table I: Dual Row Nano Back-to-Back Cable Dimensions

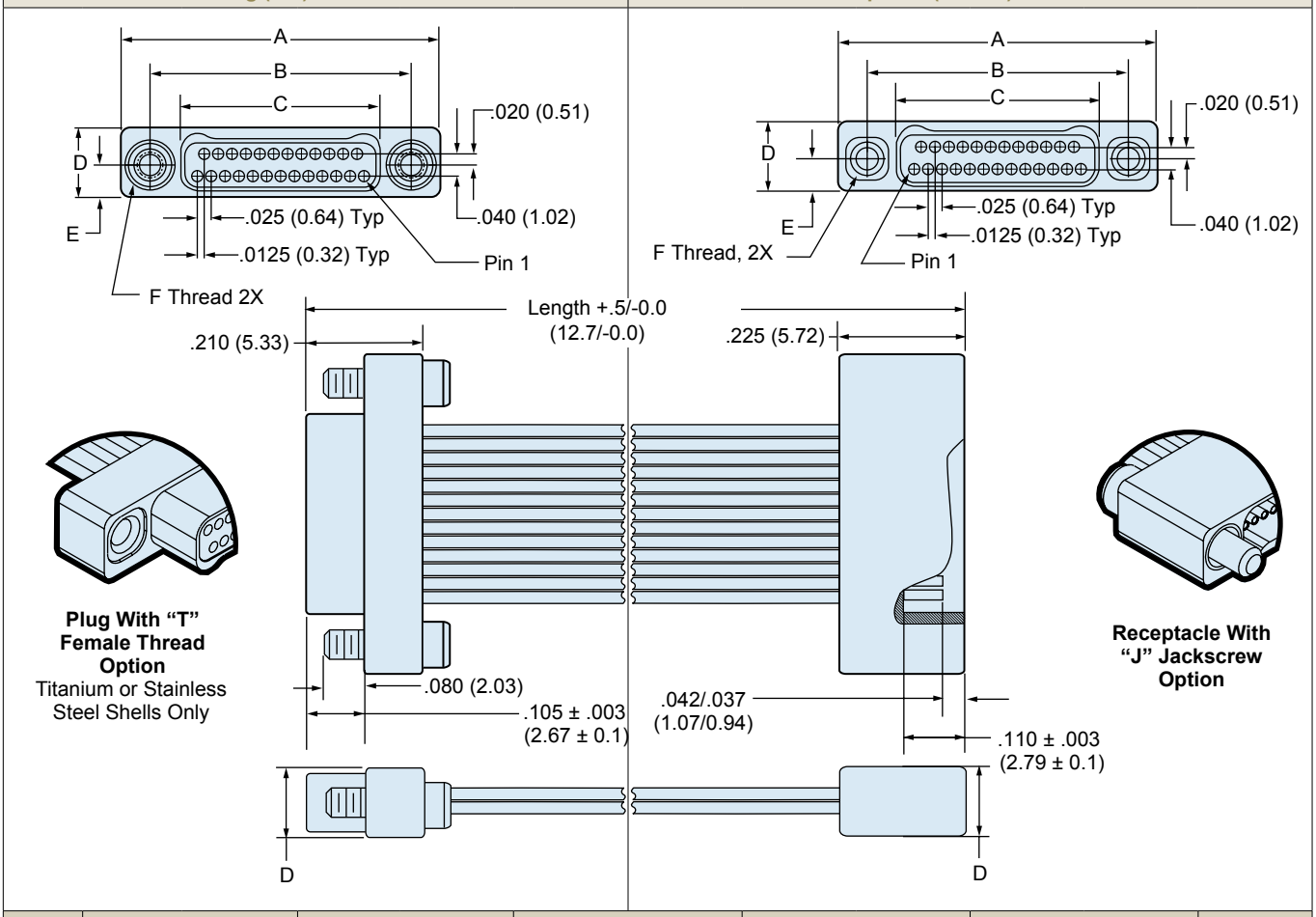

Layout	A		B BSC.		C BSC.		D		E BSC.		F Thread
	In. ± .005	mm. ± 0.13	In.	mm.	In.	mm.	In. ±.005	mm ±0.13	In.	mm	
9P	.375	9.52	.270	6.86	.160	4.06	.125	3.18	.0575	1.46	#0-80 UNF
9S	.375	9.52	.270	6.86	.163	4.14	.125	3.18	.0575	1.46	#0-80 UNF
15P	.450	11.43	.345	8.76	.235	5.97	.125	3.18	.0575	1.46	#0-80 UNF
15S	.450	11.43	.345	8.76	.238	6.04	.125	3.18	.0575	1.46	#0-80 UNF
21P	.525	13.33	.420	10.67	.310	7.87	.125	3.18	.0575	1.46	#0-80 UNF
21S	.525	13.33	.420	10.67	.313	7.95	.125	3.18	.0575	1.46	#0-80 UNF
25P	.575	14.60	.470	11.94	.360	9.14	.125	3.18	.0575	1.46	#0-80 UNF
25S	.575	14.60	.470	11.94	.363	9.22	.125	3.18	.0575	1.46	#0-80 UNF
31P	.650	16.51	.545	13.84	.435	11.05	.125	3.18	.0575	1.46	#0-80 UNF
31S	.650	16.51	.545	13.84	.438	11.12	.125	3.18	.0575	1.46	#0-80 UNF
37P	.725	18.41	.620	15.75	.510	12.95	.125	3.18	.0575	1.46	#0-80 UNF
37S	.725	18.41	.620	15.75	.513	13.03	.125	3.18	.0575	1.46	#0-80 UNF
51P	.900	22.86	.795	20.19	.685	17.40	.125	3.18	.0575	1.46	#0-80 UNF
51S	.900	22.86	.795	20.19	.688	17.47	.125	3.18	.0575	1.46	#0-80 UNF
65P	1.075	27.30	.970	24.64	.860	21.84	.125	3.18	.0575	1.46	#0-80 UNF
65S	1.075	27.30	.970	24.64	.863	21.92	.125	3.18	.0575	1.46	#0-80 UNF
69P	1.125	28.57	1.020	25.91	.910	23.11	.125	3.18	.0575	1.46	#0-80 UNF
69S	1.125	28.57	1.020	25.91	.913	23.19	.125	3.18	.0575	1.46	#0-80 UNF
85P	1.377	34.97	1.246	31.65	1.110	28.19	.150	3.81	.070	1.78	#2-56 UNC
85S	1.377	34.97	1.246	31.65	1.113	28.27	.150	3.81	.070	1.78	#2-56 UNC

Dimensions in inches (millimeters) and are subject to change without notice.

© 2013 Glenair, Inc.

GLENAIR, INC. • 1211 AIR WAY • GLENDALE, CA 91201-2497 • 818-247-6000 • FAX 818-500-9912
www.glenair.com E-Mail: sales@glenair.com

899-011
Dual Row Nano
Rectangular EMI Cover

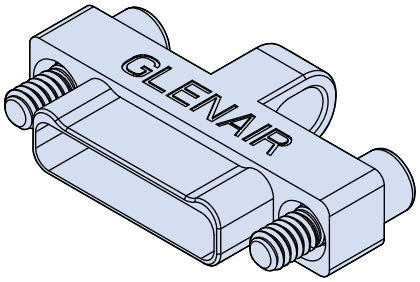

Glenair EMI Covers offer the same EMI protection as a mated connector from electro magnetic interference as a result of electromagnetic induction emitted from intended external sources such as radio transmissions or electromagnetic radiation and from unintentional sources such as electric power transmission lines. These covers feature a solid one piece construction machined from your choice of aluminum, stainless steel or titanium. Standard aluminum finishes include cadmium or electroless nickel plating. Available with or without lanyard attachment. Covers are in accordance with MIL-DTL-32139/3 and MIL-DTL-32139/4.

How to Order Nano Dual Row EMI Cover

Sample Part Number	899-011	-25	P	S	J	F	3	-126

Series	**899-011** EMI Dual Row, Nanominiature Cover
Insert Arrangement	**9, 15, 21, 25, 31, 37, 51, 65, 69, 85**; See Table II for dimensions
Body Style	**P** = Plug **S** = Receptacle
Cover Material and Finish	**A1** - Aluminum Shell, Cadmium Plating **S** - Stainless Steel, Passivated **A2** - Aluminum Shell, Electroless Nickel Plating **T** - Titanium, Unplated
Hardware	**J** - Jacksrew **T** - Female Threaded Female threads are available on plug covers only if cover material is titanium or stainless steel.
Attachment Type	**N** - No Lanyard **F** - Stainless Steel Wire Rope, Nylon jacket, Black, Ø .034 **G** - Flexible Nylon Rope, Ø .090 **H** - Stainless Steel Wire Rope, Teflon Jacket, Black, Ø .034
Attachment Length	Attachment Length in Inches (Omit for No Lanyard)
Attachment Diameter	See Table I; (Omit for No Lanyard)

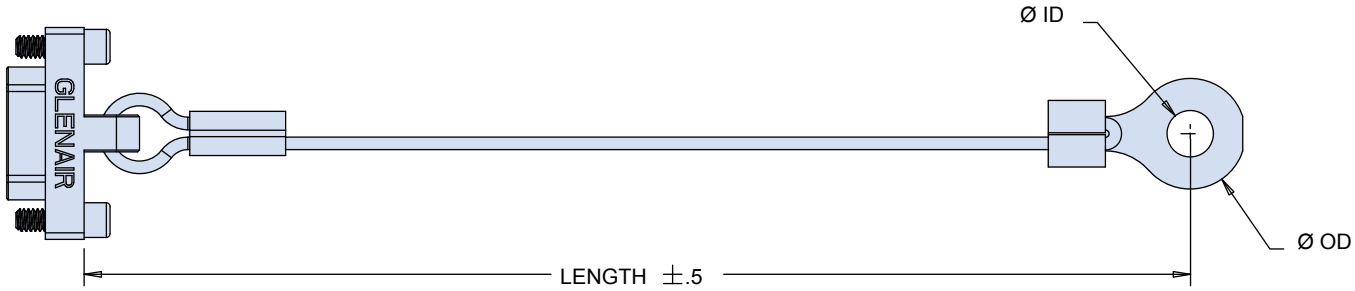

Table I: Attachment Diameter

Dash No.	-098	-126	-140	-156	-167	-188	-197	-218
ID	Ø .098 (2.49)	Ø .126 (3.20)	Ø.140 (3.56)	Ø.156 (3.96)	Ø .167 (4.24)	Ø.188 (4.78)	Ø.197 (5.00)	Ø.223/.218 (5.66/5.54)
OD	Ø .300 (7.62)	Ø .300 (7.62)	Ø .300 (7.62)	Ø .300 (7.62)	Ø .300 (7.62)	Ø .300 (7.62)	Ø .300 (7.62)	Ø .300 (7.62)

Dimensions in inches (millimeters) and are subject to change without notice.

© 2013 Glenair, Inc.

GLENAIR, INC. • 1211 AIR WAY • GLENDALE, CA 91201-2497 • 818-247-6000 • FAX 818-500-9912
www.glenair.com E-Mail: sales@glenair.com

899-011
Dual Row Nano
Rectangular EMI Cover

Table II: Dual Row Nano Dimensions

899-011 Plug Cover

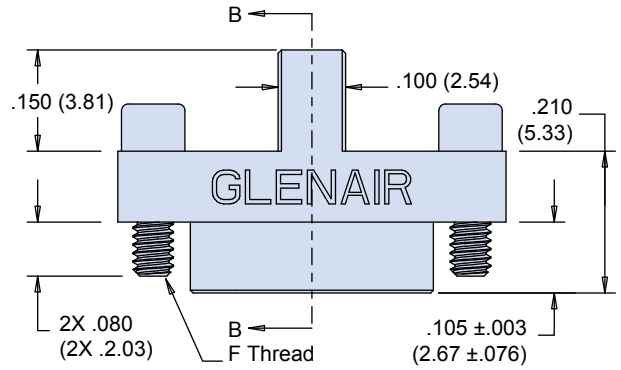

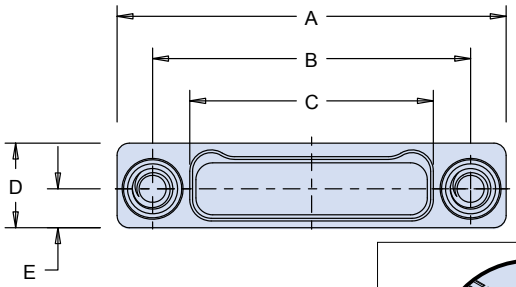

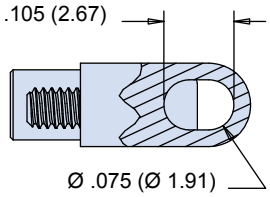

SECTION B-B

899-011 Receptacle Cover

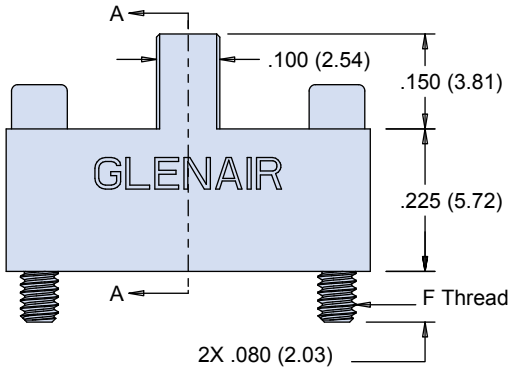

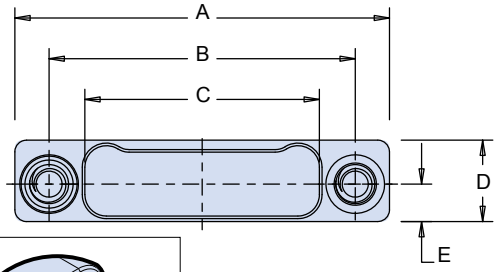

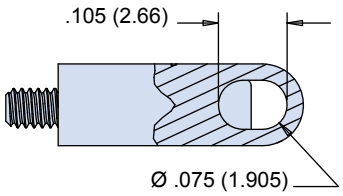

SECTION AQ-B

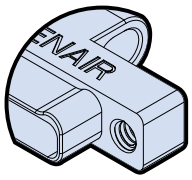

Plug With "T" Female Thread Option

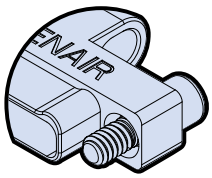

Receptacle With "J" Jackscrew Option

Layout	A		B BSC.		C BSC.		D		E		F Thread
	In.	mm.	In.	mm.	In.	mm.	In. ±.005	mm ±0.13	In.	mm	
9P	.375	9.52	.270	6.86	.160	4.06	.125	3.18	.0575	1.46	#0-80 UNF
9S	.375	9.52	.270	6.86	.163	4.14	.125	3.18	.0575	1.46	#0-80 UNF
15P	.450	11.43	.345	8.76	.235	5.97	.125	3.18	.0575	1.46	#0-80 UNF
15S	.450	11.43	.345	8.76	.238	6.04	.125	3.18	.0575	1.46	#0-80 UNF
21P	.525	13.33	.420	10.67	.310	7.87	.125	3.18	.0575	1.46	#0-80 UNF
21S	.525	13.33	.420	10.67	.313	7.95	.125	3.18	.0575	1.46	#0-80 UNF
25P	.575	14.60	.470	11.94	.360	9.14	.125	3.18	.0575	1.46	#0-80 UNF
25S	.575	14.60	.470	11.94	.363	9.22	.125	3.18	.0575	1.46	#0-80 UNF
31P	.650	16.51	.545	13.84	.435	11.05	.125	3.18	.0575	1.46	#0-80 UNF
31S	.650	16.51	.545	13.84	.438	11.12	.125	3.18	.0575	1.46	#0-80 UNF
37P	.725	18.41	.620	15.75	.510	12.95	.125	3.18	.0575	1.46	#0-80 UNF
37S	.725	18.41	.620	15.75	.513	13.03	.125	3.18	.0575	1.46	#0-80 UNF
51P	.900	22.86	.795	20.19	.685	17.40	.125	3.18	.0575	1.46	#0-80 UNF
51S	.900	22.86	.795	20.19	.688	17.47	.125	3.18	.0575	1.46	#0-80 UNF
65P	1.075	27.30	.970	24.64	.860	21.84	.125	3.18	.0575	1.46	#0-80 UNF
65S	1.075	27.30	.970	24.64	.863	21.92	.125	3.18	.0575	1.46	#0-80 UNF
69P	1.125	28.57	1.020	25.91	.910	23.11	.125	3.18	.0575	1.46	#0-80 UNF
69S	1.125	28.57	1.020	25.91	.913	23.19	.125	3.18	.0575	1.46	#0-80 UNF
85P	1.377	34.97	1.246	31.65	1.110	28.19	.150	3.81	.0700	1.78	#2-56 UNC
85S	1.377	34.97	1.246	31.65	1.113	28.27	.150	3.81	.0700	1.78	#2-56 UNC

Dimensions in inches (millimeters) and are subject to change without notice.

© 2013 Glenair, Inc.

GLENAIR, INC. • 1211 AIR WAY • GLENDALE, CA 91201-2497 • 818-247-6000 • FAX 818-500-9912
www.glenair.com E-Mail: sales@glenair.com

MIL-DTL-32139/01 and /02
Single Row Nano Connector with Insulated Wire

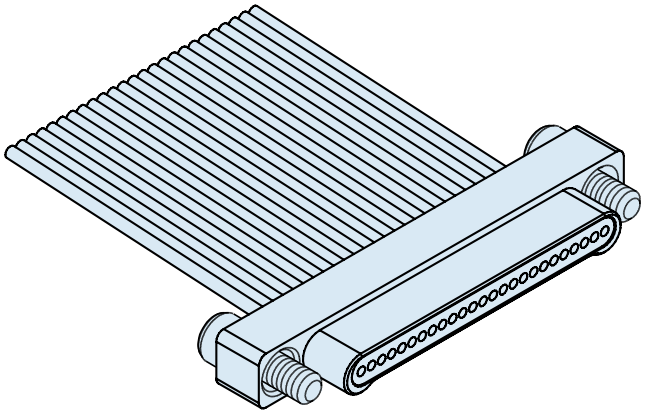

Glenair Insulated Wire Nano Connectors feature gold alloy TwistPin contacts. Contacts are precision-crimped to insulated, stranded wire. These nanomimiature connectors offer premium performance and reliability for demanding applications. Contact spacing is .025 inches. 1 amp current rating, DWV rating 250 volts AC.

TwistPin Contact System assures premium performance in demanding environments. The gold/platinum alloy contacts will stand up to years of exposure without corrosion.

Typical Applications include UAV's, satellites, missile systems and geophysical instruments.

Table I: M32139 Wire Type

Wire Type	Specification	Color	Length Inches (mm)
01	NEMA HP3-ETXBBB	White	6 (152)
02	NEMA HP3-ETXBBB	White	18 (457)
03	NEMA HP3-ETXBBB	White	36 (914)
04	NEMA HP3-ETXBBB	10 Color(2)	6 (152)
05	NEMA HP3-ETXBBB	10 Color(2)	18 (457)
06	NEMA HP3-ETXBBB	10 Color(2)	36 (914)
07	M22759/33-30	White	6 (152)
08	M22759/33-30	White	18 (457)
09	M22759/33-30	White	36 (914)
10	M22759/33-30	10 Color(2)	6 (152)
11	M22759/33-30	10 Color(2)	18 (457)
12	M22759/33-30	10 Color(2)	36 (914)
13	04047-30A(1)	White	6 (152)
14	04047-30A(1)	White	18 (457)
15	04047-30A(1)	White	36 (914)
16	04047-30A(1)	10 Color(2)	6 (152)
17	04047-30A(1)	10 Color(2)	18 (457)
18	04047-30A(1)	10 Color(2)	36 (914)

1. DSCC 04047 is a special composite wire subject to additional cost and longer delivery.
2. Color coding per MIL-STD-681, System 1, except using ten solid colors in repeating sequence.

How to Order Single Row MIL-DTL-32139 Nano Connectors

Sample part number:	M32139/01	-A	01	S	N	S

Series	**M32139/01** Plug, Pin Contacts, Single Row, Nanominiature **M32139/02** Receptacle, Socket Contacts, Single Row, Nanominiature
Insert Arrangements	**A** - 9 contacts **B** -15 contacts **C** - 21 contacts **D** - 25 contacts **E** - 31 contacts **F** - 37 contacts **G** - 51 contacts
Wire Type	**SeeTable I** All wire types specify 30 AWG stranded wire.
Hardware	**S** - Jackscrew M32139/01 Plug Only **T** - Threaded Hole M32139/02 Receptacle Only
Shell Material and Finish	**C** - Aluminum, Cadmium Finish (Not for Space) **S** - Stainless Steel, Passivated Finish **N** - Aluminum, Electroless Nickel Finish **T** - Titanium (No Finish)
Space Class	**(Blank)** - For Non-Space Applications **S** - Space Grade

Dimensions in inches (millimeters) and are subject to change without notice.

© 2013 Glenair, Inc.

GLENAIR, INC. • 1211 AIR WAY • GLENDALE, CA 91201-2497 • 818-247-6000 • FAX 818-500-9912
www.glenair.com E-Mail: sales@glenair.com

MIL-DTL-32139/01 and /02
Single Row Nano Connector with Insulated Wire

Table II: Single Row Nano Insulated Wire Dimensions

32139/01 Plug (Pin) Connectors

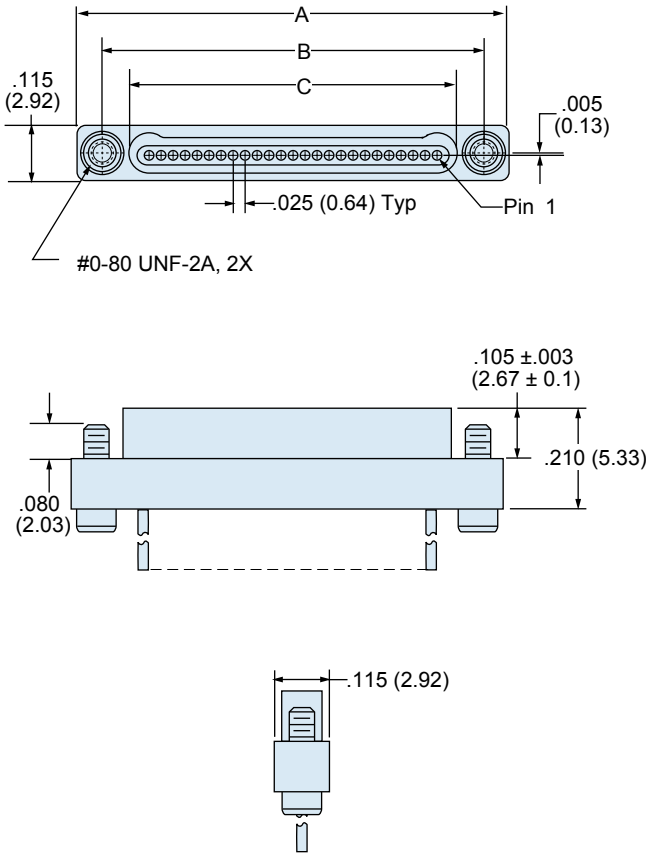

32139/02 Receptacle (Socket) Connectors

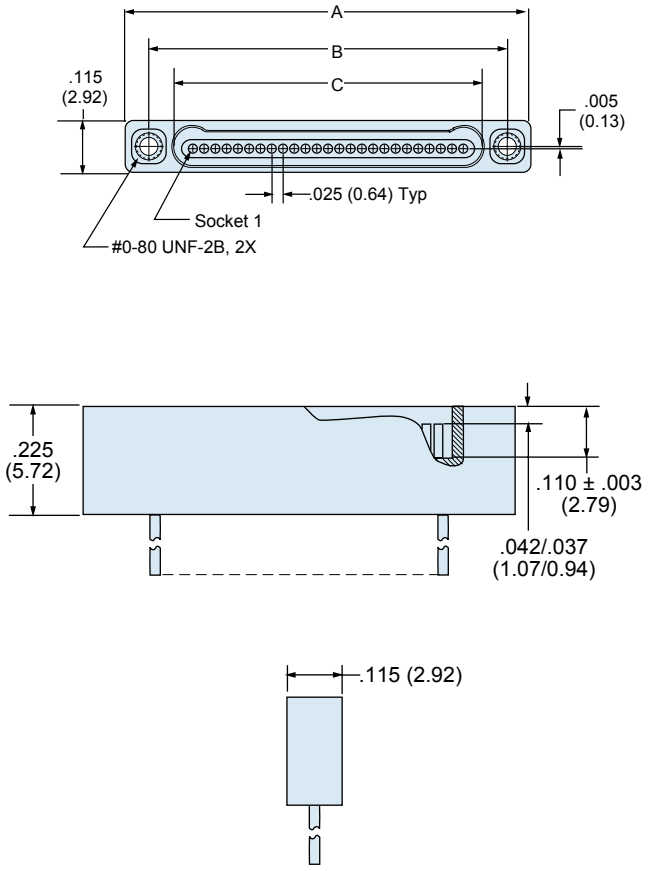

Layout	A		B BSC.		C BSC.	
	In. ± .005	mm. ± 0.13	In.	mm.	In.	mm.
9P	.500	12.70	.395	10.03	.284	7.21
9S	.500	12.70	.395	10.03	.285	7.24
15P	.650	16.51	.545	13.84	.434	11.02
15S	.650	16.51	.545	13.84	.435	11.05
21P	.800	20.32	.695	17.65	.584	14.83
21S	.800	20.32	.695	17.65	.585	14.86
25P	.900	22.86	.795	20.19	.684	17.37
25S	.900	22.86	.795	20.19	.685	17.40
31P	1.050	26.67	.945	24.00	.834	21.18
31S	1.050	26.67	.945	24.00	.835	21.21
37P	1.200	30.48	1.095	27.81	.984	24.99
37S	1.200	30.48	1.095	27.81	.985	24.02
51P	1.550	39.37	1.445	36.70	1.334	33.88
51S	1.550	39.37	1.445	36.70	1.335	33.91

Dimensions in inches (millimeters) and are subject to change without notice.

© 2013 Glenair, Inc.

GLENAIR, INC. • 1211 AIR WAY • GLENDALE, CA 91201-2497 • 818-247-6000 • FAX 818-500-9912
www.glenair.com E-Mail: sales@glenair.com

MIL-DTL-32139/03 and /04
Dual Row Nano Connector with Insulated Wire

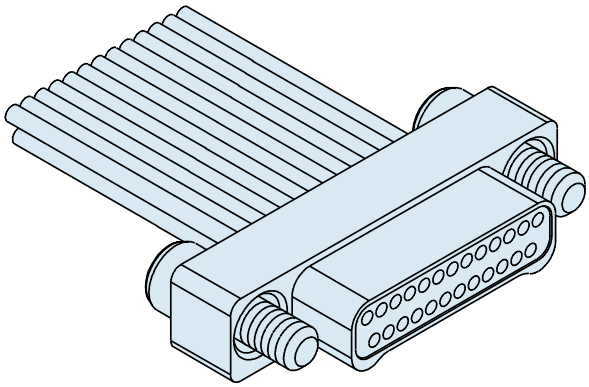

Glenair Insulated Wire Nano Connectors feature gold alloy TwistPin contacts. Contacts are precision-crimped to insulated, stranded wire. These nanomimiature connectors offer premium performance and reliability for demanding applications. Contact spacing is .025 inches. 1 amp current rating, DWV rating 250 volts AC.

TwistPin Contact System assures premium performance in demanding environments. The gold/platinum alloy contacts will stand up to years of exposure without corrosion.

Typical Applications include UAV's, satellites, missile systems and geophysical instruments.

Table I: M32139 Wire Type

Wire Type	Specification	Color	Length Inches (mm)
01	NEMA HP3-ETXBBB	White	6 (152)
02	NEMA HP3-ETXBBB	White	18 (457)
03	NEMA HP3-ETXBBB	White	36 (914)
04	NEMA HP3-ETXBBB	10 Color(2)	6 (152)
05	NEMA HP3-ETXBBB	10 Color(2)	18 (457)
06	NEMA HP3-ETXBBB	10 Color(2)	36 (914)
07	M22759/33-30	White	6 (152)
08	M22759/33-30	White	18 (457)
09	M22759/33-30	White	36 (914)
10	M22759/33-30	10 Color(2)	6 (152)
11	M22759/33-30	10 Color(2)	18 (457)
12	M22759/33-30	10 Color(2)	36 (914)
13	04047-30A(1)	White	6 (152)
14	04047-30A(1)	White	18 (457)
15	04047-30A(1)	White	36 (914)
16	04047-30A(1)	10 Color(2)	6 (152)
17	04047-30A(1)	10 Color(2)	18 (457)
18	04047-30A(1)	10 Color(2)	36 (914)

1. DSCC 04047 is a special composite wire subject to additional cost and longer delivery.
2. Color coding per MIL-STD-681, System 1, except using ten solid colors in repeating sequence.

How To Order Dual Row MIL-DTL-32139 Nano Connectors

Sample Part Number	M32139/03	-A	01	S	N	S

Series	**M32139/03** Plug, Pin Contacts, Dual Row, Nanominiature **M32139/04** Receptacle, Socket Contacts, Dual Row, Nanominiature
Insert Arrangements	**A** – 9 contacts **B** –15 contacts **C** – 21 contacts **D** – 25 contacts **E** – 31 contacts **F** – 37 contacts **G** – 51 contacts
Wire Type	**SeeTable I** All wire types specify 30 AWG stranded wire.
Hardware	**S** Jackscrew M32139/03 Plug Only **T** Threaded Hole M32139/04 Receptacle Only
Shell Material and Finish	**C** - Aluminum, Cadmium Finish (Not for Space) **S** - Stainless Steel, Passivated Finish **N** - Aluminum, Electroless Nickel Finish **T** - Titanium (No Finish)
Space Class	**(Blank)** for non-space applications **S** - Space Grade

Dimensions in inches (millimeters) and are subject to change without notice.

© 2013 Glenair, Inc.

GLENAIR, INC. • 1211 AIR WAY • GLENDALE, CA 91201-2497 • 818-247-6000 • FAX 818-500-9912
www.glenair.com E-Mail: sales@glenair.com

MIL-DTL-32139/03 and /04
Dual Row Nano Connector with Insulated Wire

Table II: Dual Row Insulated Wire Dimensions

32139/03 Plug (Pin) Connectors

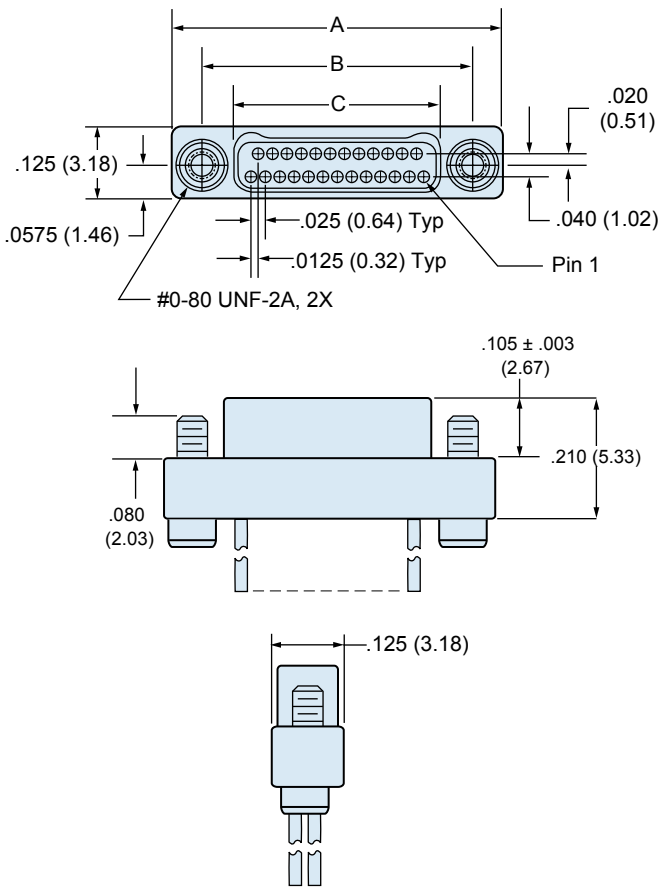

32139/04 Receptacle (Socket) Connectors

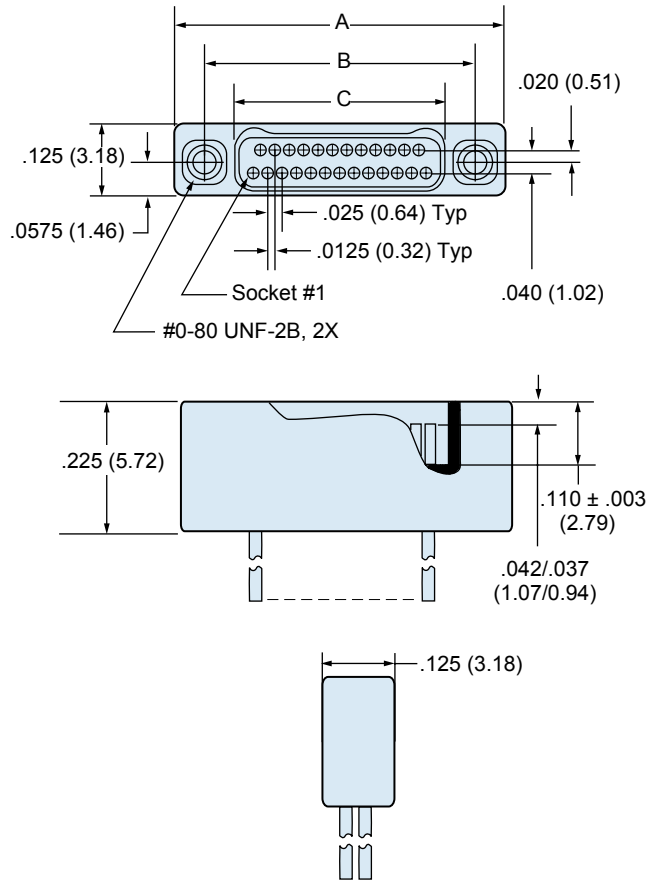

Layout	A		B BSC.		C BSC.	
	In. ± .005	mm. ± 0.13	In.	mm.	In.	mm.
9P	.375	9.52	.270	6.86	.160	4.06
9S	.375	9.52	.270	6.86	.163	4.14
15P	.450	11.43	.345	8.76	.235	5.97
15S	.450	11.43	.345	8.76	.238	6.04
21P	.525	13.33	.420	10.67	.310	7.87
21S	.525	13.33	.420	10.67	.313	7.95
25P	.575	14.60	.470	11.94	.360	9.14
25S	.575	14.60	.470	11.94	.363	9.22
31P	.650	16.51	.545	13.84	.435	11.05
31S	.650	16.51	.545	13.84	.438	11.12
37P	.725	18.41	.620	15.75	.510	12.95
37S	.725	18.41	.620	15.75	.513	13.03
51P	.900	22.86	.795	20.19	.685	17.40
51S	.900	22.86	.795	20.19	.688	17.47

Dimensions in inches (millimeters) and are subject to change without notice.

© 2013 Glenair, Inc.

GLENAIR, INC. • 1211 AIR WAY • GLENDALE, CA 91201-2497 • 818-247-6000 • FAX 818-500-9912
www.glenair.com E-Mail: sales@glenair.com

890-006 and 890-007
Vertical Mount PCB, Single Row Nano Connector
Thru Hole Type

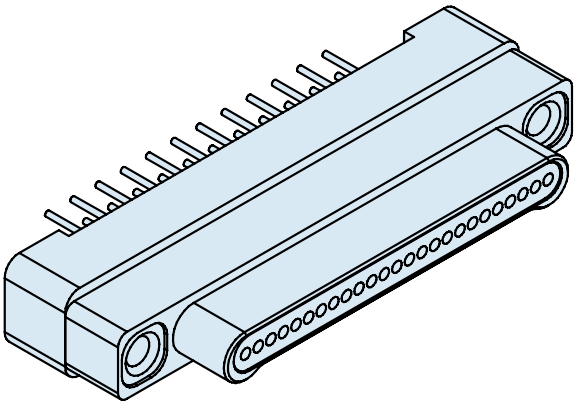

Vertical Mount Thru Hole PCB Nano Connectors feature gold alloy TwistPin contacts. These nanomimiature connectors offer premium performance and reliability for demanding applications. Available with #0-80 female threads, or with jackscrews for use with flexible circuits.

Pre-Tinned PC Tails are coated with Sn63Pb37 tin-lead for excellent solderability.

Choose Aluminum, Titanium or Stainless Steel Shells in eight layouts from 5 to 51 contacts. Complies to the requirements of MIL-DTL-32139. These connectors are intermateable with any corresponding Glenair Series 890 single row metal shell nanominiature connector.

How to Order Vertical Mount PCB Connectors

Sample Part Number	890-007	-31S	T	-BST	1	T
Series	**890-006** Plug, Pin Contacts, Single Row, Vertical PCB Nanominiature **890-007** Receptacle, Socket Contacts, Single Row, Vertical PCB Nanominiature					
Insert Arrangement/ Contact Type	Plugs (890-006): **5P**, **9P**, **15P**, **21P**, **25P**, **31P**, **37P**, **51P** Receptacles (890-007): **5S**, **9S**, **15S**, **21S**, **25S**, **31S**, **37S**, **51S**					
Shell Material and Finish	**A1** - Aluminum Shell, Cadmium Plating **A2** - Aluminum Shell, Electroless Nickel Plating **T** - Titanium Shell, Unplated **S** - Stainless Steel Shell, Passivated					
Termination Type	**BST** - Board Straight Thru-Hole					
PC Tail Length	**1** - .110 Inch (2.79) **2** - .172 Inch (4.37) **3** - .140 Inch (3.55)					
Hardware	**J** - Jackscrew, #0-80 **T** - Female Thread, #0-80					

Dimensions in inches (millimeters) and are subject to change without notice.

© 2013 Glenair, Inc.

GLENAIR, INC. • 1211 AIR WAY • GLENDALE, CA 91201-2497 • 818-247-6000 • FAX 818-500-9912
www.glenair.com E-Mail: sales@glenair.com

890-006 and 890-007
Vertical Mount PCB, Single Row Nano Connector
Thru Hole Type

Single Row Vertical Nano PCB Dimensions

890-006 Plug (Pin) Connectors

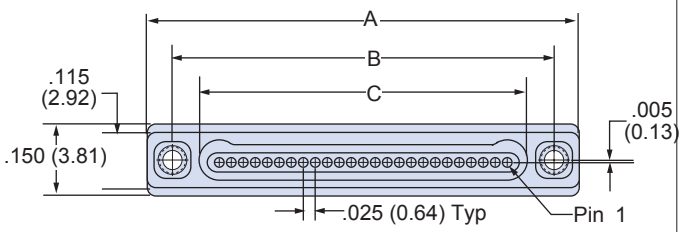

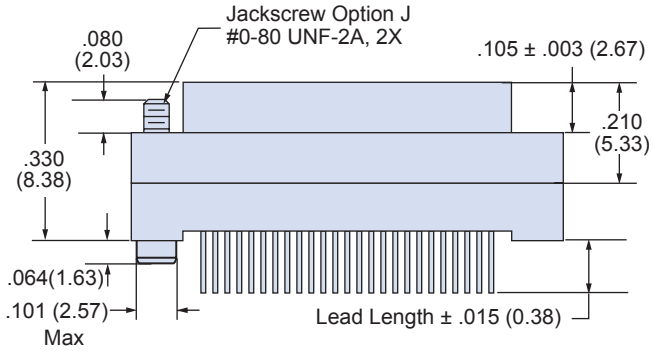

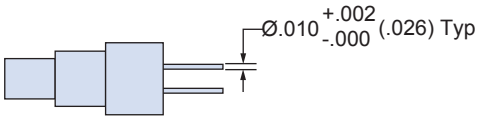

890-007 Receptacle (Socket) Connectors

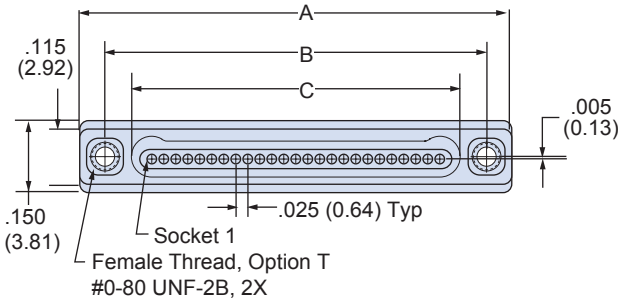

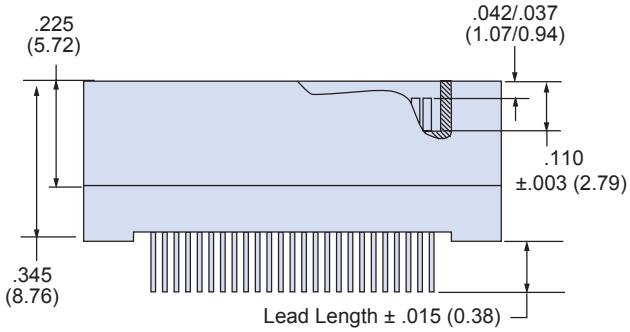

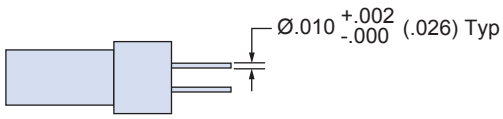

Layout	A		B BSC.		C BSC.	
	In. ± .005	mm. ± 0.13	In.	mm.	In.	mm.
5P	.400	10.16	.295	7.49	.184	4.67
5S	.400	10.16	.295	7.49	.185	4.70
9P	.500	12.70	.395	10.03	.284	7.21
9S	.500	12.70	.395	10.03	.285	7.24
15P	.650	16.51	.545	13.84	.434	11.02
15S	.650	16.51	.545	13.84	.435	11.05
21P	.800	20.32	.695	17.65	.584	14.83
21S	.800	20.32	.695	17.65	.585	14.86
25P	.900	22.86	.795	20.19	.684	17.37
25S	.900	22.86	.795	20.19	.685	17.40
31P	1.050	26.67	.945	24.00	.834	21.18
31S	1.050	26.67	.945	24.00	.835	21.21
37P	1.200	30.48	1.095	27.81	.984	24.99
37S	1.200	30.48	1.095	27.81	.985	24.02
51P	1.550	39.37	1.445	36.70	1.334	33.88
51S	1.550	39.37	1.445	36.70	1.335	33.91

Dimensions in inches (millimeters) and are subject to change without notice.

© 2013 Glenair, Inc.

GLENAIR, INC. • 1211 AIR WAY • GLENDALE, CA 91201-2497 • 818-247-6000 • FAX 818-500-9912
www.glenair.com E-Mail: sales@glenair.com

890-006 and 890-007
Vertical Mount PCB, Single Row Nano Connector
Thru Hole Type

Vertical PCB Plug (Pin) Connector Layout 890-006

5 Contacts

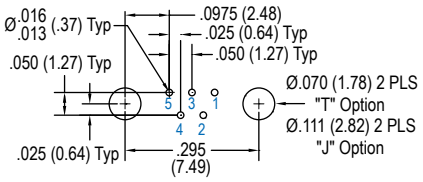

9 Contacts

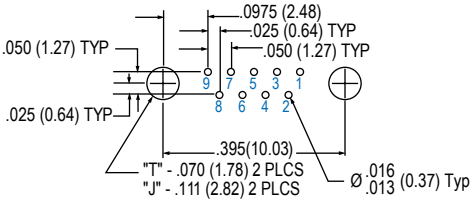

15 Contacts

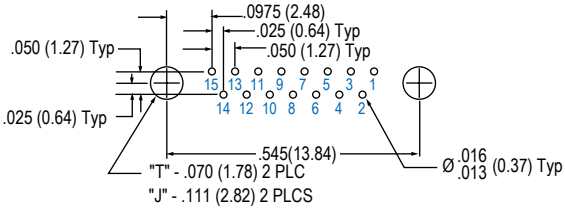

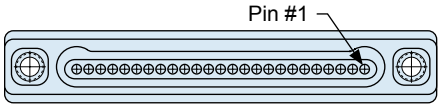

Connector Mating Face

21 Contacts

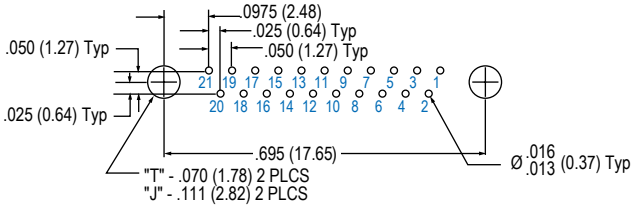

25 Contacts

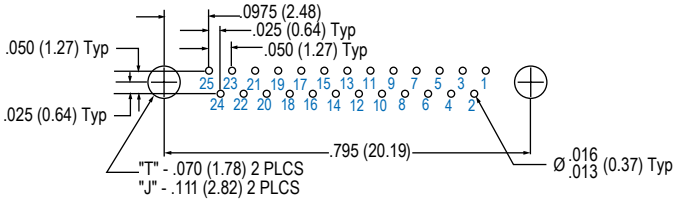

31 Contacts

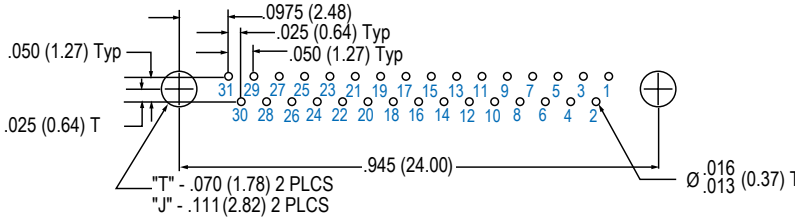

37 Contacts

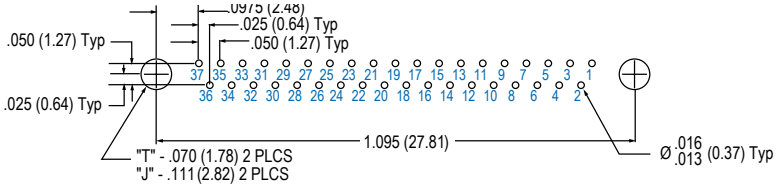

51 Contacts

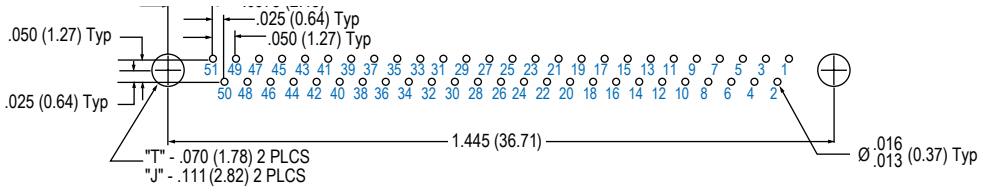

Layouts shown are for connector mounting side of PC Board.

© 2013 Glenair, Inc.

GLENAIR, INC. • 1211 AIR WAY • GLENDALE, CA 91201-2497 • 818-247-6000 • FAX 818-500-9912
www.glenair.com E-Mail: sales@glenair.com

890-006 and 890-007
Vertical Mount PCB, Single Row Nano Connector
Thru Hole Type

Vertical PCB Receptacle (Socket) Connector Layout 890-007

5 Contacts

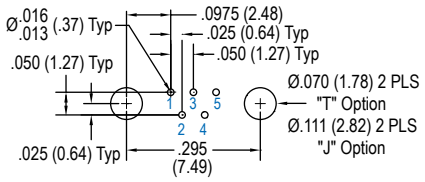

9 Contacts

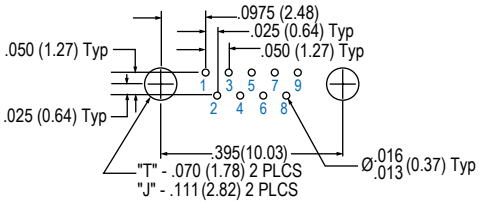

15 Contacts

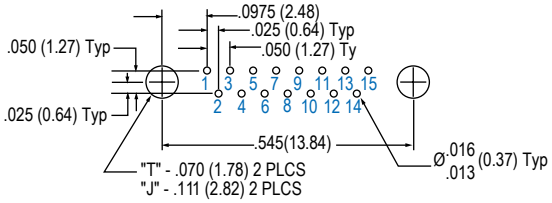

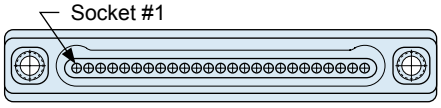

Connector Mating Face

21 Contacts

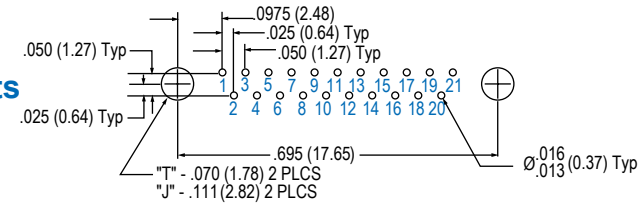

25 Contacts

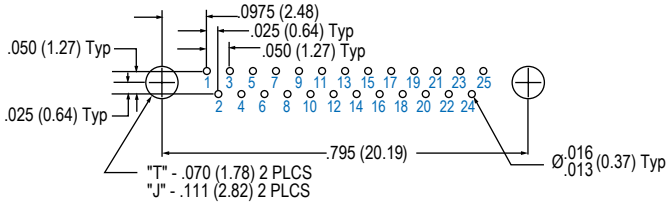

31 Contacts

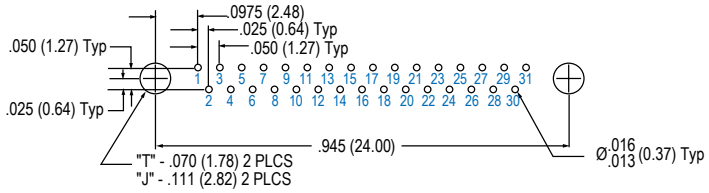

37 Contacts

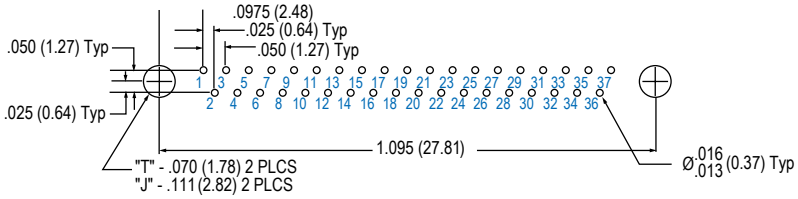

51 Contacts

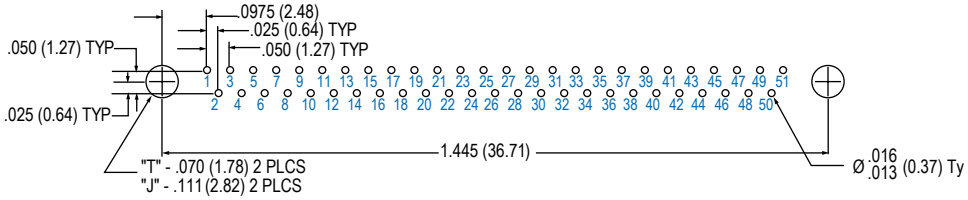

Layouts shown are for connector mounting side of PC Board.

Dimensions in inches (millimeters) and are subject to change without notice.

© 2013 Glenair, Inc.

890-008 and 890-009
Right Angle Mount PCB, Single Row Nano Connector
Thru Hole Type

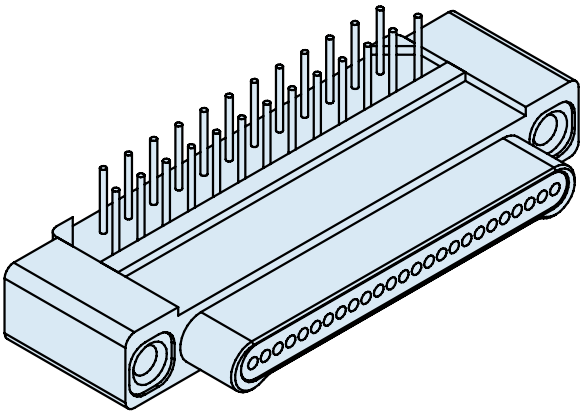

Right Angle Thru Hole PCB Nano Connectors feature gold alloy TwistPin contacts. These nanomimiature connectors offer premium performance and reliability for demanding applications. Available with #0-80 female threads, or with jackscrews for use with flexible circuits.

Pre-Tinned PC Tails are coated with Sn63Pb37 tin-lead for excellent solderability.

Choose Aluminum, Titanium or Stainless Steel Shells in eight layouts from 5 to 51 contacts. Complies to the requirements of MIL-DTL-32139. These connectors are intermateable with any corresponding Glenair Series 890 single row metal shell nanominiature connector.

How To Order Right Angle PCB Connectors

Sample Part Number	890-008	-51P	A2	-BRT	1	T
Series	**890-008** Plug, Pin Contacts, Single Row, Right Angle Thru-Hole PCB Nanominiature **890-009** Receptacle, Socket Contacts, Single Row, Right Angle Thru-Hole PCB Nanominiature					
Insert Arrangement/ Contact Type	Plugs (890-008): **5P**, **9P**, **15P**, **21P**, **25P**, **31P**, **37P**, **51P** Receptacles (890-009): **5S**, **9S**, **15S**, **21S**, **25S**, **31S**, **37S**, **51S**					
Shell Material and Finish	**A1** - Aluminum Shell, Cadmium Plating **A2** - Aluminum Shell, Electroless Nickel Plating **T** - Titanium Shell, Unplated **S** - Stainless Steel Shell, Passivated					
Termination Type	**BRT** - Board Right Angle Thru-Hole					
PC Tail Length	**1** - .110 (2.79) **2** - .172 (4.37) **3** - .140 (3.55)					
Hardware	**J** - Jackscrew, #0-80 **T** - Female Thread, #0-80					

Dimensions in inches (millimeters) and are subject to change without notice.

© 2013 Glenair, Inc.

GLENAIR, INC. • 1211 AIR WAY • GLENDALE, CA 91201-2497 • 818-247-6000 • FAX 818-500-9912
www.glenair.com E-Mail: sales@glenair.com

890-008 and 890-009
Right Angle Mount PCB, Single Row Nano Connector
Thru Hole Type

Single Row Nano Right Angle PCB Dimensions

890-008 Plug (Pin) Connectors

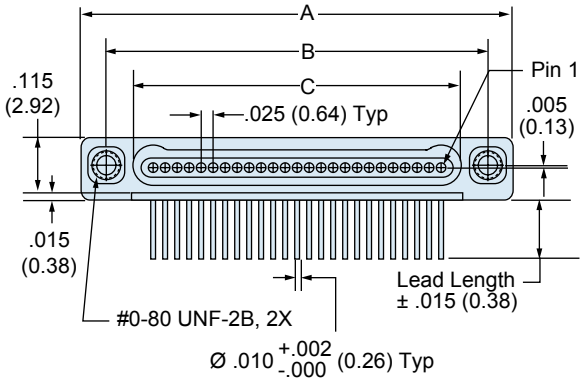

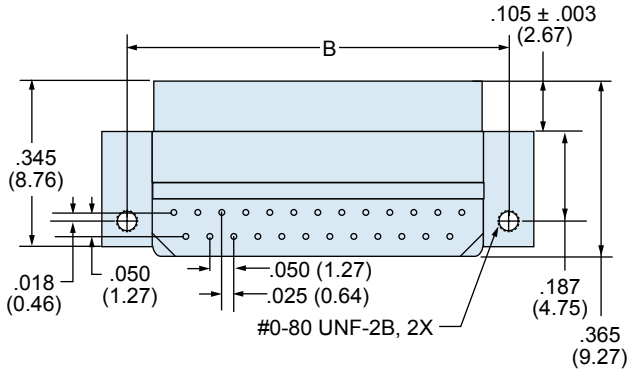

890-009 Receptacle (Socket) Connectors

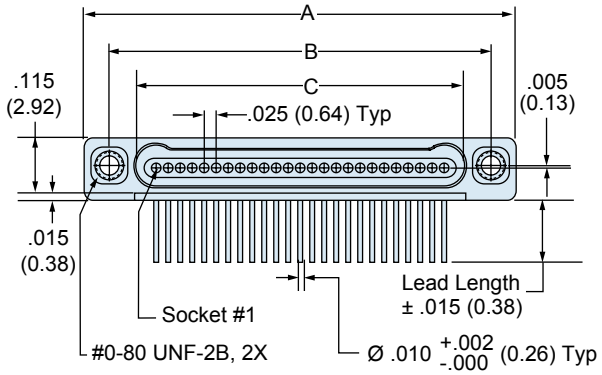

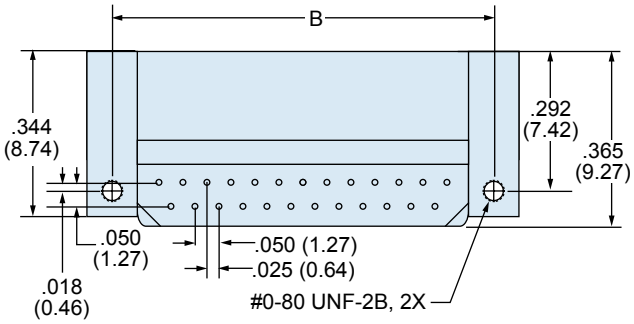

Layout	A		B BSC.		C BSC.	
	In. ± .005	mm. ± 0.13	In.	mm.	In.	mm.
5P	.400	10.16	.295	7.49	.184	4.67
5S	.400	10.16	.295	7.49	.185	4.70
9P	.500	12.70	.395	10.03	.284	7.21
9S	.500	12.70	.395	10.03	.285	7.24
15P	.650	16.51	.545	13.84	.434	11.02
15S	.650	16.51	.545	13.84	.435	11.05
21P	.800	20.32	.695	17.65	.584	14.83
21S	.800	20.32	.695	17.65	.585	14.86
25P	.900	22.86	.795	20.19	.684	17.37
25S	.900	22.86	.795	20.19	.685	17.40
31P	1.050	26.67	.945	24.00	.834	21.18
31S	1.050	26.67	.945	24.00	.835	21.21
37P	1.200	30.48	1.095	27.81	.984	24.99
37S	1.200	30.48	1.095	27.81	.985	24.02
51P	1.550	39.37	1.445	36.70	1.334	33.88
51S	1.550	39.37	1.445	36.70	1.335	33.91

Dimensions in inches (millimeters) and are subject to change without notice.

© 2013 Glenair, Inc.

GLENAIR, INC. • 1211 AIR WAY • GLENDALE, CA 91201-2497 • 818-247-6000 • FAX 818-500-9912
www.glenair.com E-Mail: sales@glenair.com

890-008 and 890-009
Right Angle Mount PCB, Single Row Nano Connector
Thru Hole Type

Right Angle PCB Plug (Pin) Connector Layout 890-008

5 Contacts

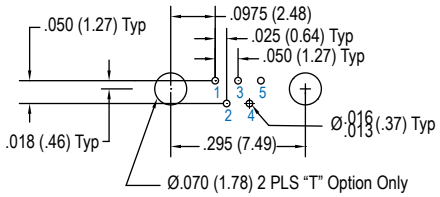

9 Contacts

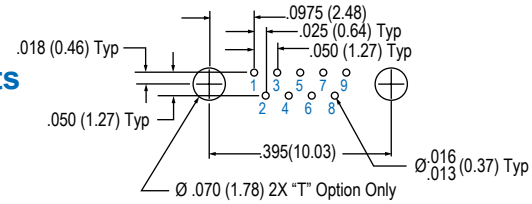

15 Contacts

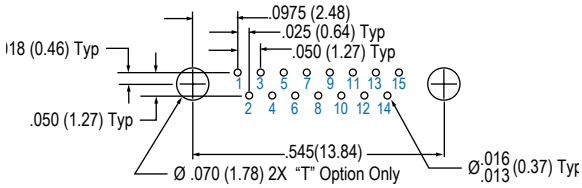

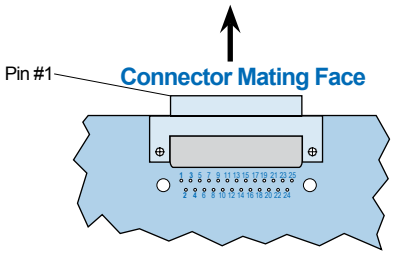

Component Mounting Side of PCB

(25P actual size)

21 Contacts

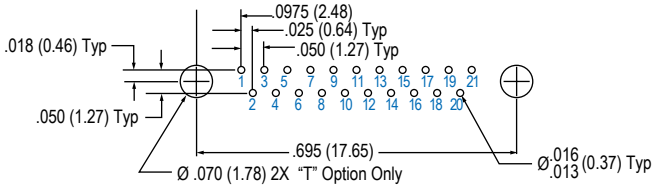

25 Contacts

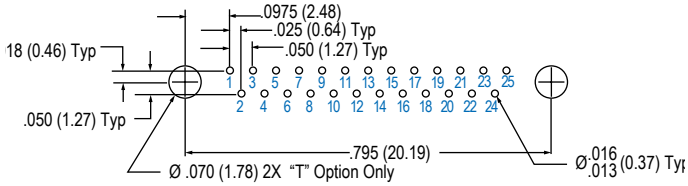

31 Contacts

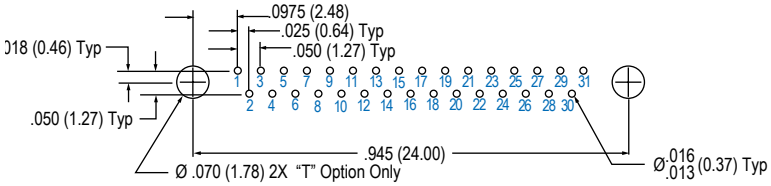

37 Contacts

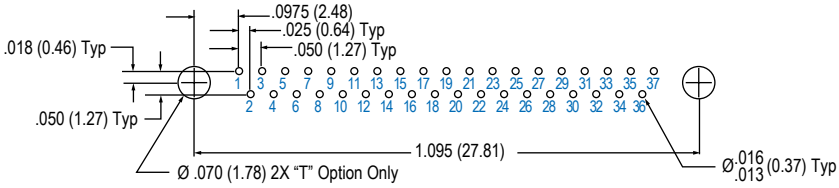

51 Contacts

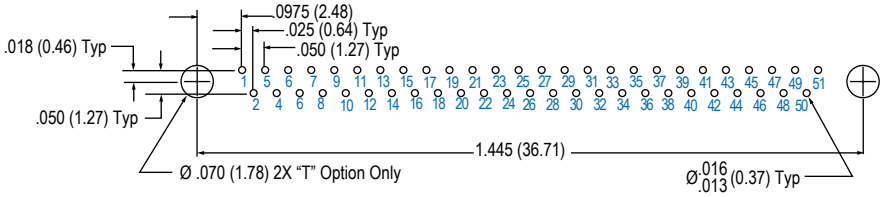

Layouts shown are for connector mounting side of PC Board.

© 2013 Glenair, Inc.

GLENAIR, INC. • 1211 AIR WAY • GLENDALE, CA 91201-2497 • 818-247-6000 • FAX 818-500-9912
www.glenair.com E-Mail: sales@glenair.com

890-008 and 890-009
Right Angle Mount PCB, Single Row Nano Connector
Thru Hole Type

Right Angle PCB Receptacle (Socket) Connector Layout 890-009

5 Contacts

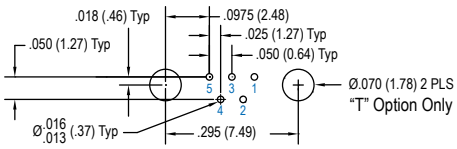

9 Contacts

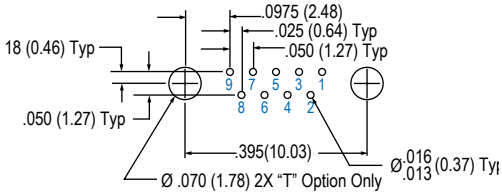

15 Contacts

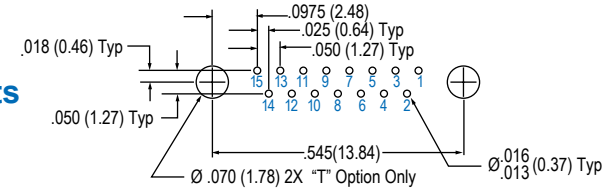

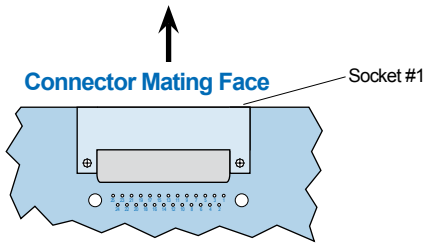

Component Mounting Side of PCB

(25S actual size)

21 Contacts

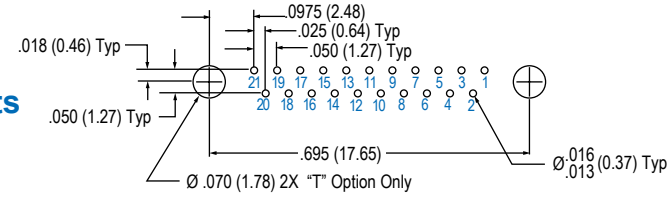

25 Contacts

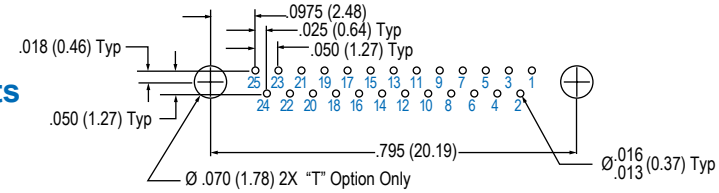

31 Contacts

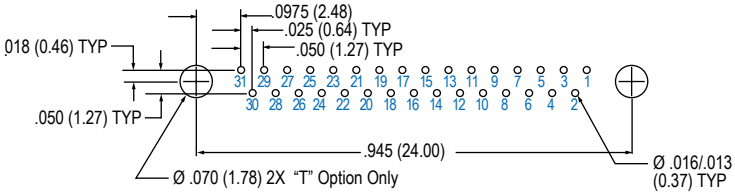

37 Contacts

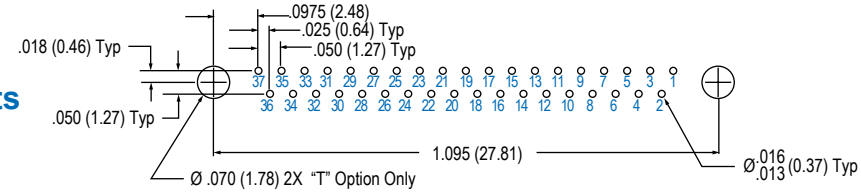

51 Contacts

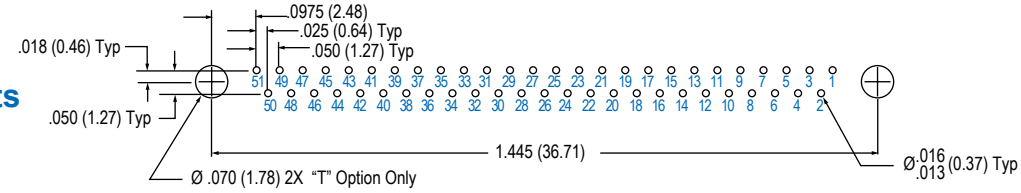

Layouts shown are for connector mounting side of PC Board.

© 2013 Glenair, Inc.

GLENAIR, INC. • 1211 AIR WAY • GLENDALE, CA 91201-2497 • 818-247-6000 • FAX 818-500-9912
www.glenair.com E-Mail: sales@glenair.com

890-010 and 890-011
Vertical Mount PCB, Single Row Nano Connector
Surface Mount Type

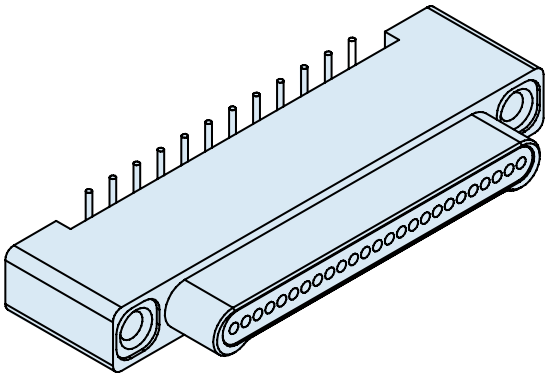

Vertical SMT PCB Nano Connectors feature gold alloy TwistPin contacts. These nanomimiature connectors offer premium performance and reliability for demanding applications. Available with #0-80 female threads.

Pre-Tinned PC Tails are coated with Sn63Pb37 tin-lead for excellent solderability.

Choose Aluminum, Titanium or Stainless Steel Shells in eight layouts from 5 to 51 contacts. Complies to the requirements of MIL-DTL-32139. These connectors are intermateable with any corresponding Glenair Series 890 single row metal shell nanominiature connector.

How To Order Vertical SMT PCB Connectors						
Sample Part Number		**890-010**	**-37P**	**A1**	**-BSS**	**T**
Series	**890-010** Plug, Pin Contacts, Single Row, Vertical SMT Nanominiature **890-011** Receptacle, Socket Contacts, Single Row, Vertical SMT Nanominiature					
Insert Arrangement/ Contact Type	Plugs (890-010): **5P**, **9P**, **15P**, **21P**, **25P**, **31P**, **37P**, **51P** Receptacles (890-011): **5S**,**9S**, **15S**, **21S**, **25S**, **31S**, **37S**, **51S**					
Shell Material and Finish	**A1** - Aluminum Shell, Cadmium Plating **A2** - Aluminum Shell, Electroless Nickel Plating **T** - Titanium Shell, Unplated **S** - Stainless Steel Shell, Passivated					
Termination Type	**BSS** - Board Straight Surface Mount					
Hardware	**T** - Female Thread, #0-80					

Dimensions in inches (millimeters) and are subject to change without notice.

© 2013 Glenair, Inc.

GLENAIR, INC. • 1211 AIR WAY • GLENDALE, CA 91201-2497 • 818-247-6000 • FAX 818-500-9912
www.glenair.com E-Mail: sales@glenair.com

890-010 and 890-011
Vertical Mount PCB, Single Row Nano Connector
Surface Mount Type

Single Row Nano Vertical SMT Dimensions

890-010 Plug (Pin) Connectors

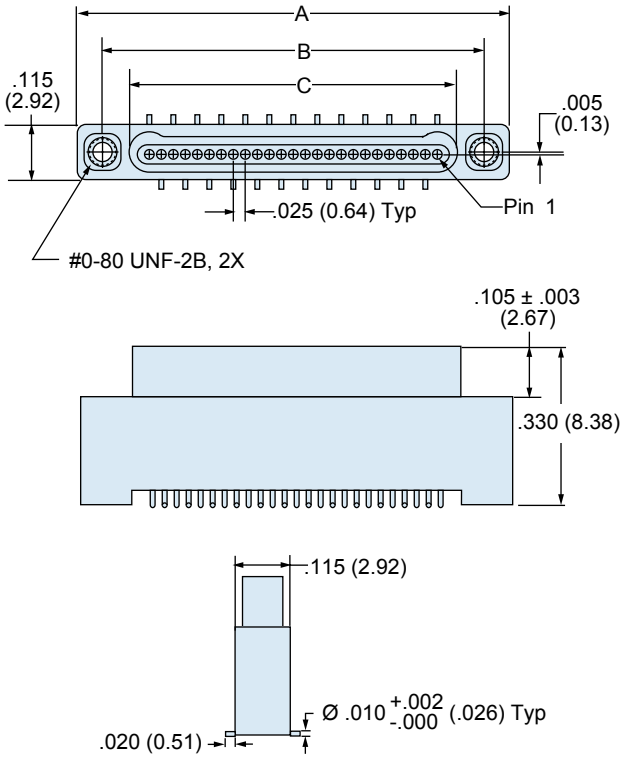

890-011 Receptacle (Socket) Connectors

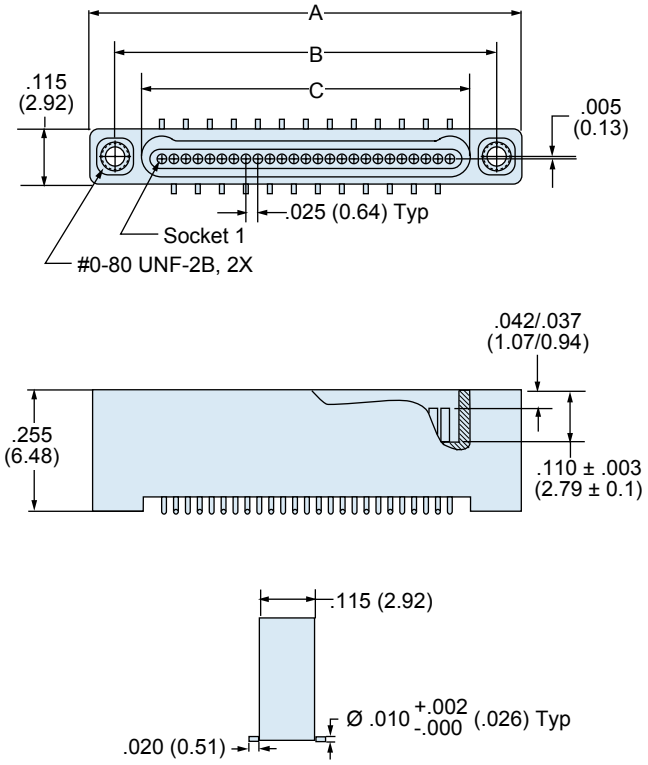

Layout	A		B BSC.		C BSC.	
	In. ± .005	mm. ± 0.13	In.	mm.	In.	mm.
5P	.400	10.16	.295	7.49	.184	4.67
5S	.400	10.16	.295	7.49	.185	4.70
9P	.500	12.70	.395	10.03	.284	7.21
9S	.500	12.70	.395	10.03	.285	7.24
15P	.650	16.51	.545	13.84	.434	11.02
15S	.650	16.51	.545	13.84	.435	11.05
21P	.800	20.32	.695	17.65	.584	14.83
21S	.800	20.32	.695	17.65	.585	14.86
25P	.900	22.86	.795	20.19	.684	17.37
25S	.900	22.86	.795	20.19	.685	17.40
31P	1.050	26.67	.945	24.00	.834	21.18
31S	1.050	26.67	.945	24.00	.835	21.21
37P	1.200	30.48	1.095	27.81	.984	24.99
37S	1.200	30.48	1.095	27.81	.985	24.02
51P	1.550	39.37	1.445	36.70	1.334	33.88
51S	1.550	39.37	1.445	36.70	1.335	33.91

Dimensions in inches (millimeters) and are subject to change without notice.

© 2013 Glenair, Inc.

GLENAIR, INC. • 1211 AIR WAY • GLENDALE, CA 91201-2497 • 818-247-6000 • FAX 818-500-9912
www.glenair.com E-Mail: sales@glenair.com

890-010 and 890-011
Vertical Mount PCB, Single Row Nano Connector
Surface Mount Type

Vertical SMT Plug (Pin) Connector Layout 890-010

5 Contacts

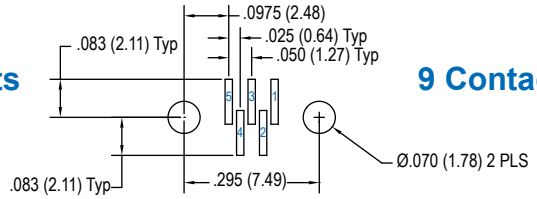

9 Contacts

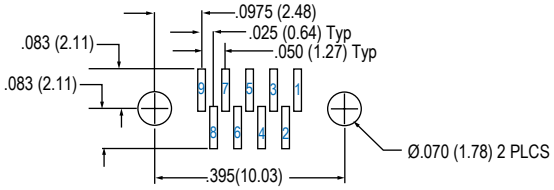

15 Contacts

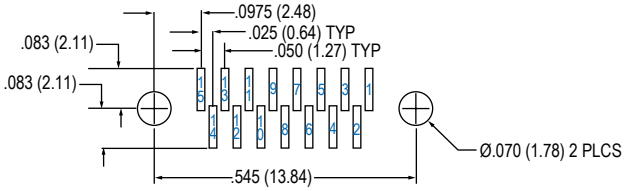

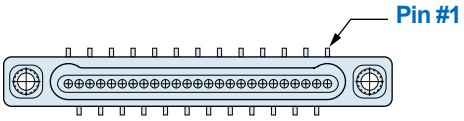

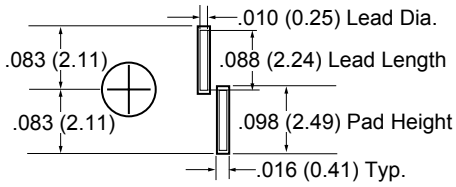

PAD/FOOTPRINT DETAIL

21 Contacts

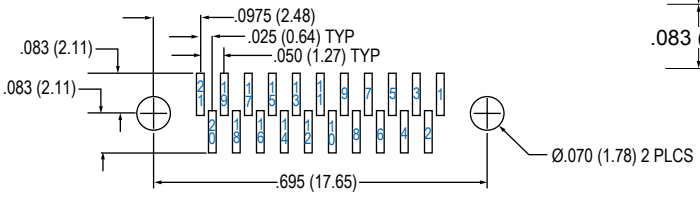

25 Contacts

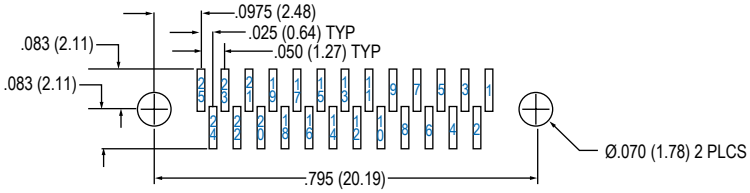

31 Contacts

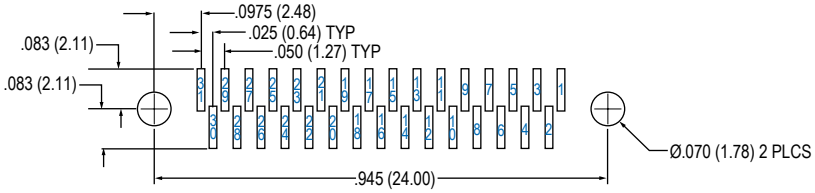

37 Contacts

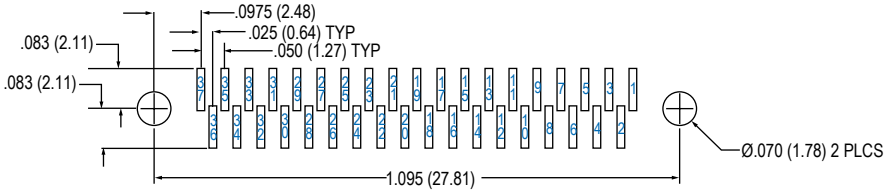

51 Contacts

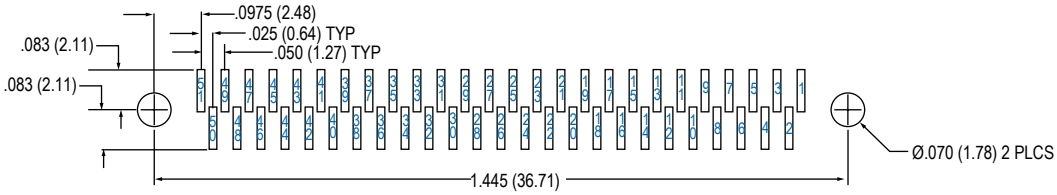

Layouts shown are for connector mounting side of PC Board.

© 2013 Glenair, Inc.

GLENAIR, INC. • 1211 AIR WAY • GLENDALE, CA 91201-2497 • 818-247-6000 • FAX 818-500-9912
www.glenair.com **E-Mail: sales@glenair.com**

890-010 and 890-011
Vertical Mount PCB, Single Row Nano Connector
Surface Mount Type

Vertical SMT Receptacle (Socket) Connector Layout 890-011

5 Contacts

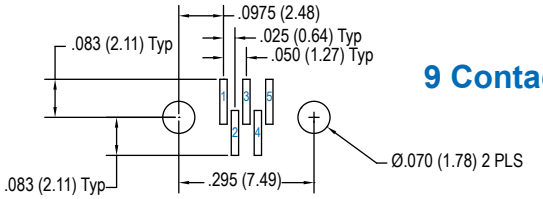

9 Contacts

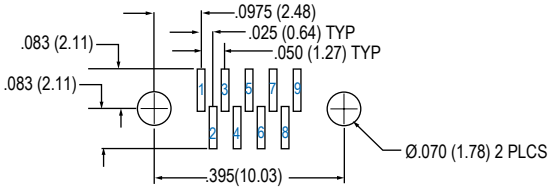

15 Contacts

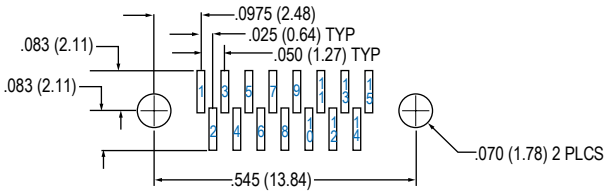

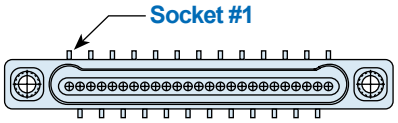

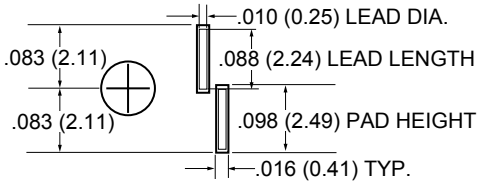

PAD/FOOTPRINT DETAIL

21 Contacts

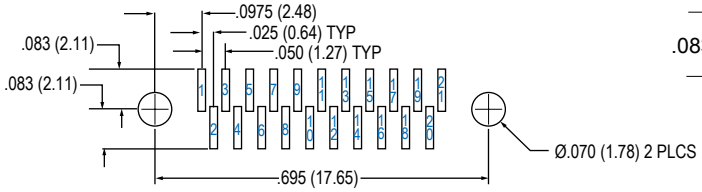

25 Contacts

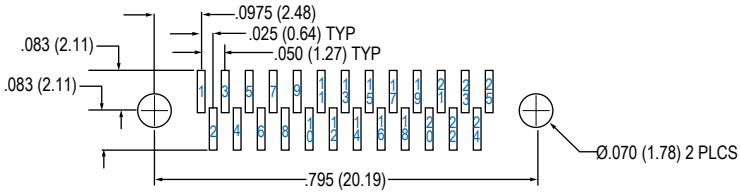

31 Contacts

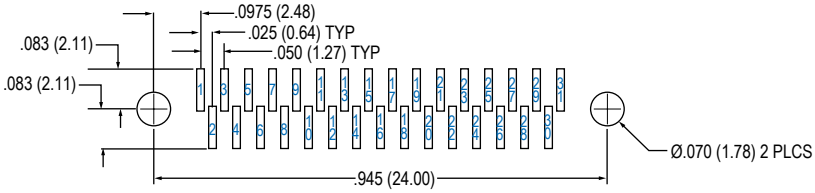

37 Contacts

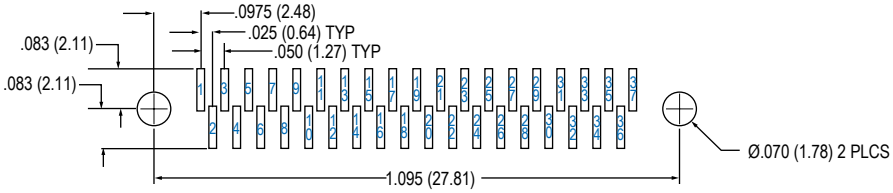

51 Contacts

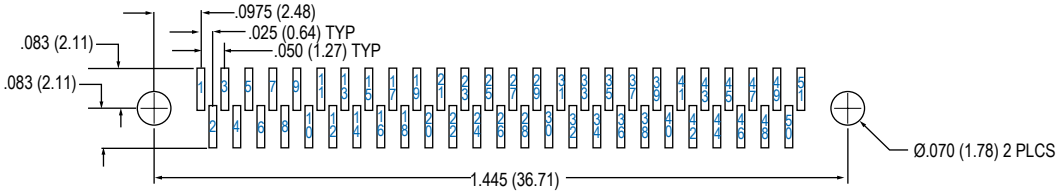

Layouts shown are for connector mounting side of PC Board.

© 2013 Glenair, Inc.

GLENAIR, INC. • 1211 AIR WAY • GLENDALE, CA 91201-2497 • 818-247-6000 • FAX 818-500-9912
www.glenair.com E-Mail: sales@glenair.com

890-012 and 890-013
Right Angle Mount PCB, Single Row Nano Connector
Surface Mount Type

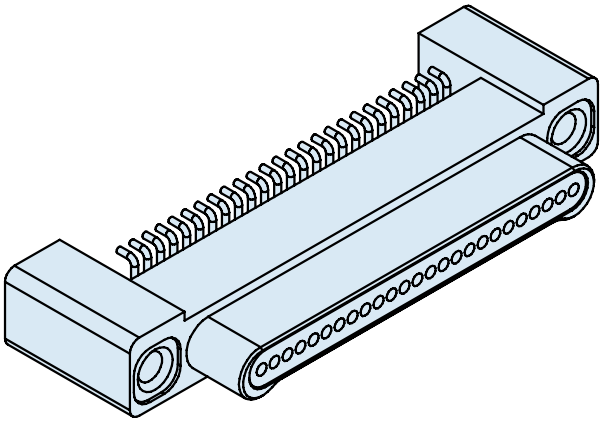

Right Angle SMT PCB Nano Connectors feature gold alloy TwistPin contacts. These nanomimiature connectors offer premium performance and reliability for demanding applications. Available with #0-80 female threads.

Pre-Tinned PC Tails are coated with Sn63Pb37 tin-lead for excellent solderability.

Choose Aluminum, Titanium or Stainless Steel Shells in eight layouts from 5 to 51 contacts. Complies to the requirements of MIL-DTL-32139. These connectors are intermateable with any corresponding Glenair Series 890 single row metal shell nanominiature connector.

How to Order Right Angle SMT PCB Connectors					
Sample Part Number	**890-012**	**-51P**	**T**	**-BRS**	**T**
Series	**890-012** Plug, Pin Contacts, Single Row, Right Angle SMT Nanominiature **890-013** Receptacle, Socket Contacts, Single Row, Right Angle SMT Nanominiature				
Insert Arrangement/ Contact Type	Plugs (890-012): **5P**, **9P, 15P, 21P, 25P, 31P, 37P, 51P,** Receptacles (890-013): **5S**, **9S, 15S, 21S, 25S, 31S, 37S, 51S**				
Shell Material and Finish	**A1** - Aluminum Shell, Cadmium Plating **A2** - Aluminum Shell, Electroless Nickel Plating **T** - Titanium Shell, Unplated **S** - Stainless Steel Shell, Passivated				
Termination Type	**BRS** - Board Right Angle Surface Mount				
Hardware	**T** - Female Thread, #0-80				

Dimensions in inches (millimeters) and are subject to change without notice.

© 2013 Glenair, Inc.

GLENAIR, INC. • 1211 AIR WAY • GLENDALE, CA 91201-2497 • 818-247-6000 • FAX 818-500-9912
www.glenair.com E-Mail: sales@glenair.com

890-012 and 890-013
Right Angle Mount PCB, Single Row Nano Connector
Surface Mount Type

Single Row Nano Right Angle SMT Dimensions

890-012 Plug (Pin) Connectors

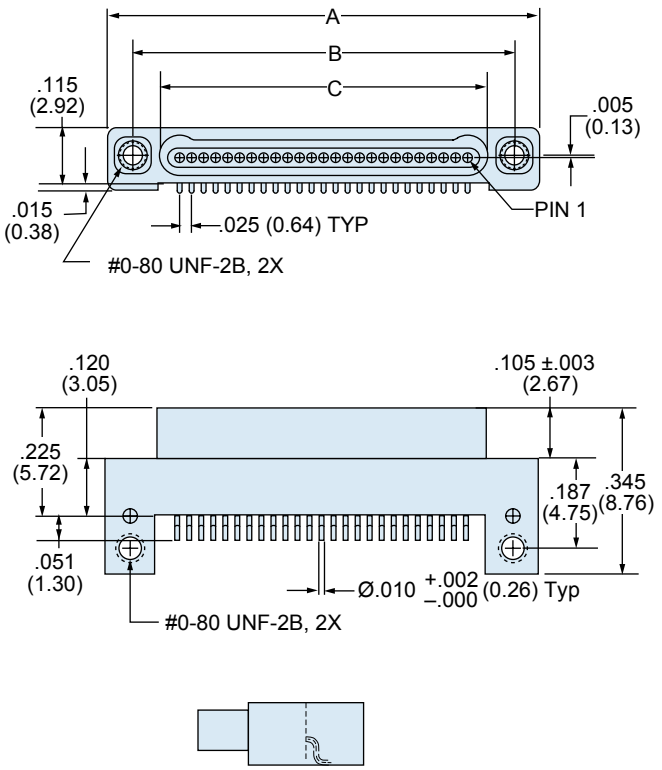

890-013 Receptacle (Socket) Connectors

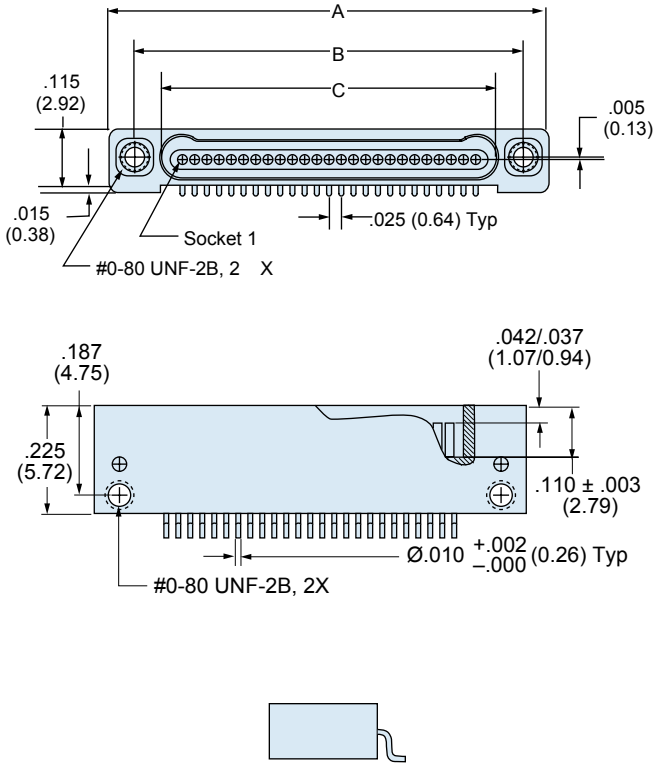

Layout	A		B BSC.		C BSC.	
	In. ± .005	mm. ± 0.13	In.	mm.	In.	mm.
5P	.400	10.16	.295	7.49	.184	4.67
5S	.400	10.16	.295	7.49	.185	4.70
9P	.500	12.70	.395	10.03	.284	7.21
9S	.500	12.70	.395	10.03	.285	7.24
15P	.650	16.51	.545	13.84	.434	11.02
15S	.650	16.51	.545	13.84	.435	11.05
21P	.800	20.32	.695	17.65	.584	14.83
21S	.800	20.32	.695	17.65	.585	14.86
25P	.900	22.86	.795	20.19	.684	17.37
25S	.900	22.86	.795	20.19	.685	17.40
31P	1.050	26.67	.945	24.00	.834	21.18
31S	1.050	26.67	.945	24.00	.835	21.21
37P	1.200	30.48	1.095	27.81	.984	24.99
37S	1.200	30.48	1.095	27.81	.985	24.02
51P	1.550	39.37	1.445	36.70	1.334	33.88
51S	1.550	39.37	1.445	36.70	1.335	33.91

Dimensions in inches (millimeters) and are subject to change without notice.

© 2013 Glenair, Inc.

GLENAIR, INC. • 1211 AIR WAY • GLENDALE, CA 91201-2497 • 818-247-6000 • FAX 818-500-9912
www.glenair.com E-Mail: sales@glenair.com

890-012 and 890-013
Right Angle Mount PCB, Single Row Nano Connector
Surface Mount Type

Right Angle SMT Plug (Pin) Connector Layout 890-012

5 Contacts

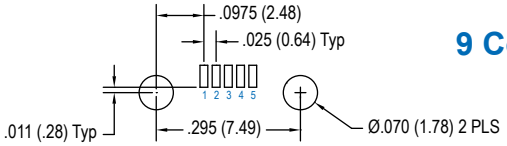

9 Contacts

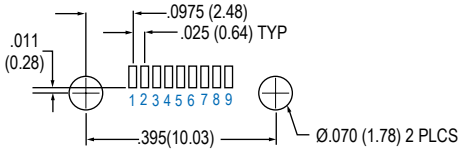

15 Contacts

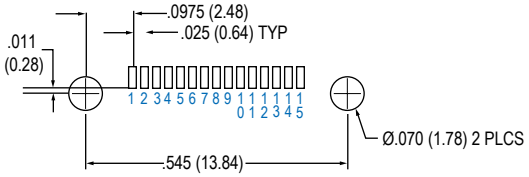

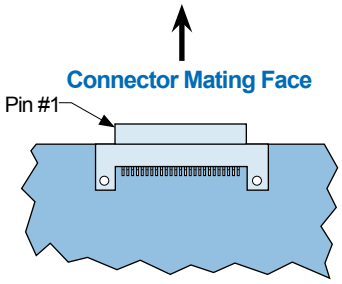

Component Mounting Side of PCB

(25P actual size)

21 Contacts

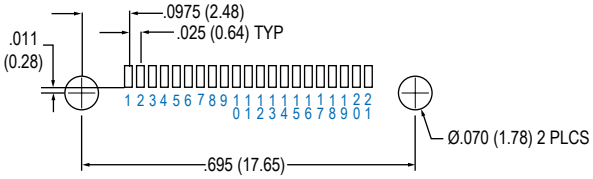

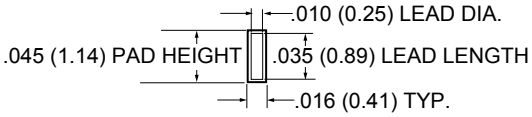

PAD/FOOTPRINT DETAIL

25 Contacts

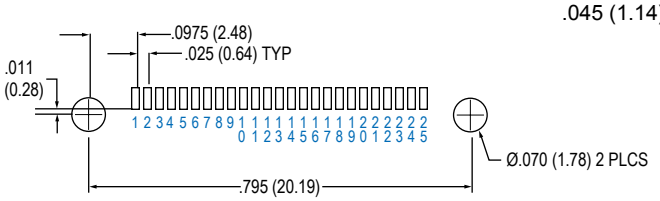

31 Contacts

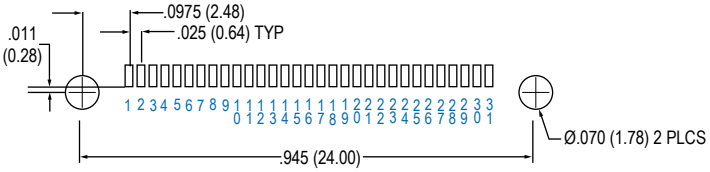

37 Contacts

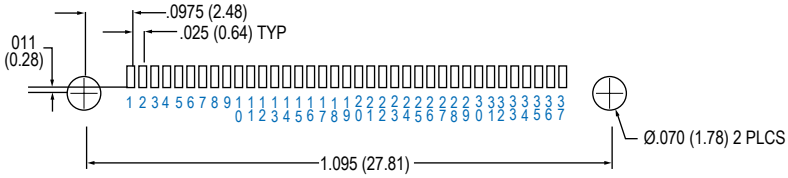

51 Contacts

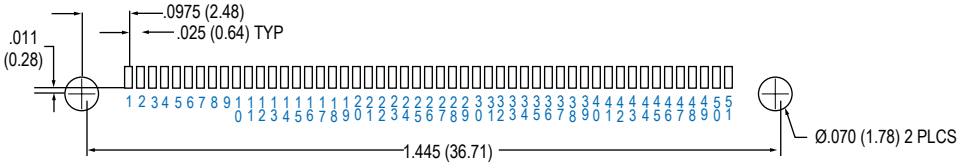

Layouts shown are for connector mounting side of PC Board.

© 2013 Glenair, Inc.

GLENAIR, INC. • 1211 AIR WAY • GLENDALE, CA 91201-2497 • 818-247-6000 • FAX 818-500-9912
www.glenair.com E-Mail: sales@glenair.com

890-012 and 890-013
Right Angle Mount PCB, Single Row Nano Connector
Surface Mount Type

Right Angle SMT Receptacle (Socket) Connector Layout 890-013

5 Contacts

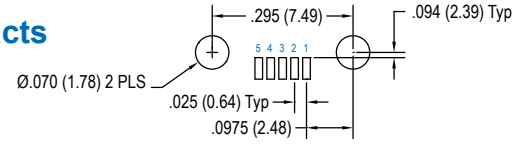

9 Contacts

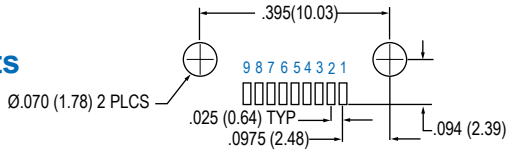

15 Contacts

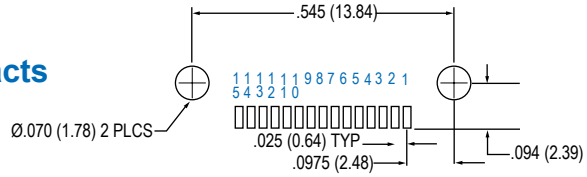

Connector Mating Face

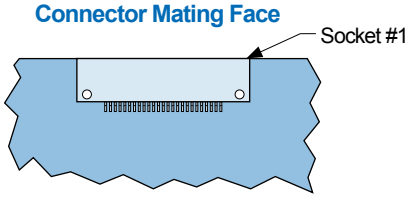

Component Mounting Side of PCB

(25S actual size)

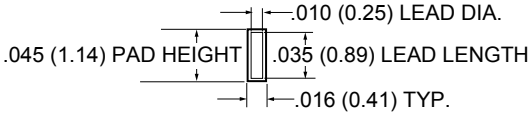

PAD/FOOTPRINT DETAIL

21 Contacts

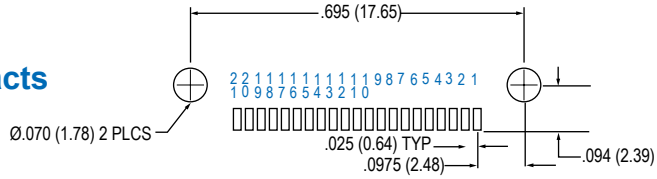

25 Contacts

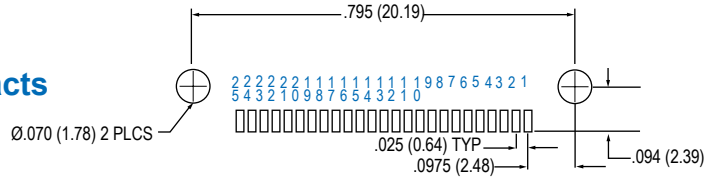

31 Contacts

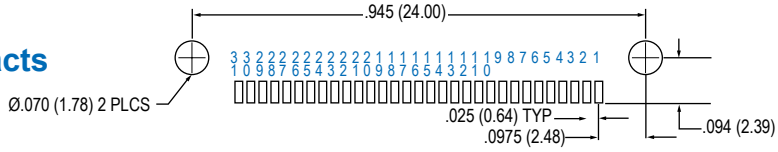

37 Contacts

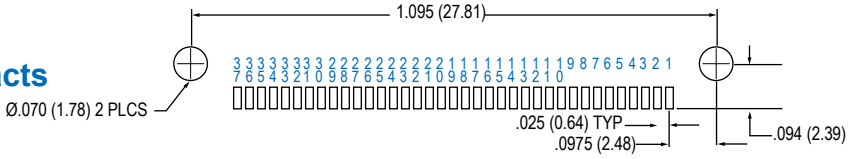

51 Contacts

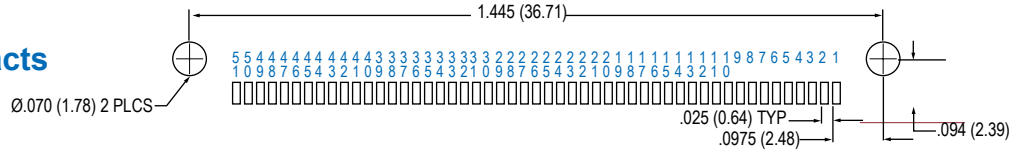

Layouts shown are for connector mounting side of PC Board.

© 2013 Glenair, Inc.

GLENAIR, INC. • 1211 AIR WAY • GLENDALE, CA 91201-2497 • 818-247-6000 • FAX 818-500-9912
www.glenair.com **E-Mail: sales@glenair.com**

891-006 and 891-007
Vertical Mount PCB, Dual Row Nano Connector
Thru Hole Type

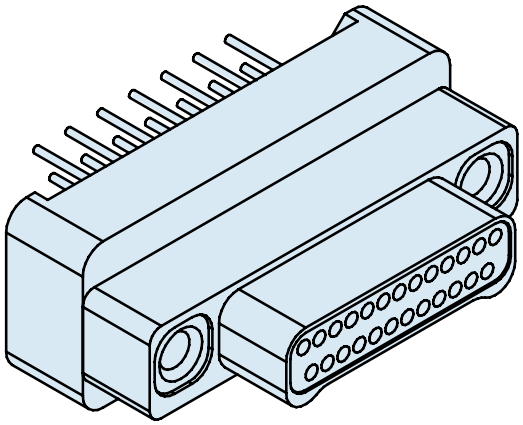

Vertical Mount PCB Nano Connectors feature gold alloy TwistPin contacts. These nanomimiature connectors offer premium performance and reliability for demanding applications. Available with female threads, or with jackscrews for use with flexible circuits.

Pre-Tinned PC Tails are coated with Sn63Pb37 tin-lead for excellent solderability.

Choose Aluminum, Titanium or Stainless Steel Shells in ten layouts from 9 to 85 contacts. Complies to the requirements of MIL-DTL-32139. These connectors are intermateable with any corresponding Glenair Series 891 Dual row metal shell nanominiature connector.

How to Order Vertical Mount PCB Connectors						
Sample Part Number	891-007	-31S	T	BST	1	T
Series	**891-006** Plug, Pin Contacts, Dual Row, Vertical PCB Nanominiature **891-007** Receptacle, Socket Contacts, Dual Row, Vertical PCB Nanominiature					
Insert Arrangement/ Contact Type	Plugs (891-006) **9P, 15P, 21P, 25P, 31P, 37P, 51P, 65P, 69P, 85P** Receptacles (891-007) **9S, 15S, 21S, 25S, 31S, 37S, 51S, 65S, 69S, 85S**					
Shell Material and Finish	**A1** - Aluminum Shell, Cadmium Plating **T** - Titanium Shell, Unplated **A2** - Aluminum Shell, Electroless Nickel Plating **S** - Stainless Steel Shell, Passivated					
Termination Type	**BST** - Board Straight Thru-Hole					
PC Tail Length	**1** - .110 Inch (2.79 mm) **2** - .172 Inch (4.37 mm) **3** - .140 inch (3.56 mm)					
Hardware	**J** - Jackscrew **T** - Female Thread					

Dimensions in inches (millimeters) and are subject to change without notice.

© 2013 Glenair, Inc.

GLENAIR, INC. • 1211 AIR WAY • GLENDALE, CA 91201-2497 • 818-247-6000 • FAX 818-500-9912
www.glenair.com E-Mail: sales@glenair.com

891-006 and 891-007
Vertical Mount PCB, Dual Row Nano Connector
Thru Hole Type

Dual Row Vertical PCB Nano Dimensions

891-006 Plug (Pin) Connectors

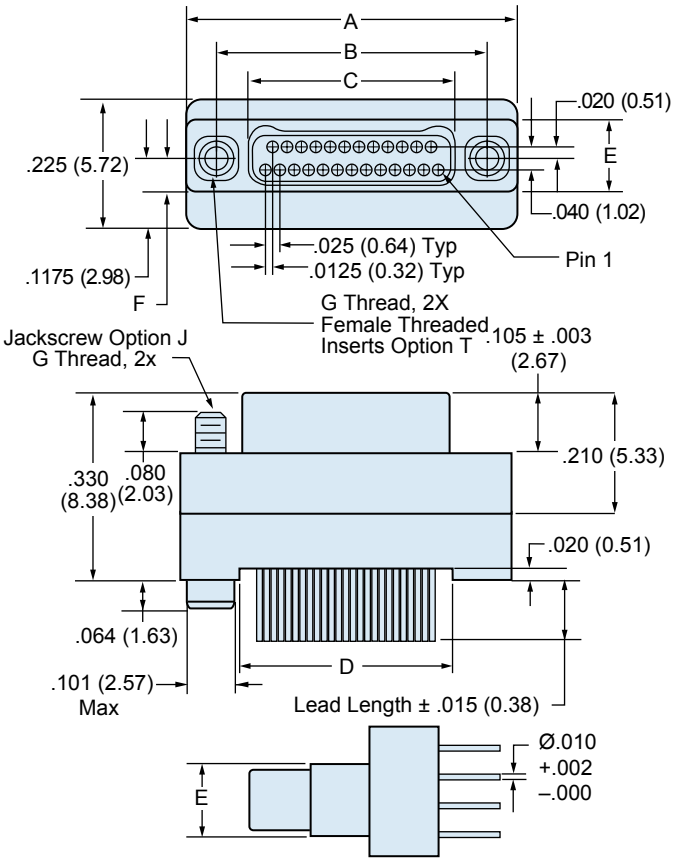

891-007 Receptacle (Socket) Connectors

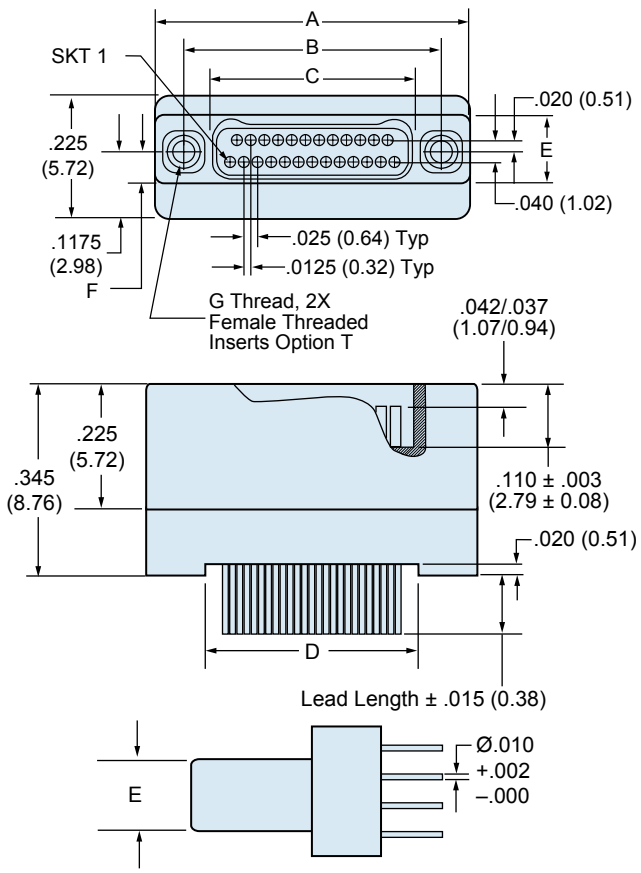

Layout	A		B BSC.		C BSC.		D		E		F BSC		G Thread
	In. ± .005	mm. ±0.13	In.	mm.	In.	mm.	In. ±.005	mm ±0.13.	In.	mm.	In	mm	
9P	.375	9.52	.270	6.86	.160	4.06	.170	4.32	.125	3.18	.0575	1.46	#0-80 UNF
9S	.375	9.52	.270	6.86	.163	4.14	.170	4.32	.125	3.18	.0575	1.46	#0-80 UNF
15P	.450	11.43	.345	8.76	.235	5.97	.245	6.22	.125	3.18	.0575	1.46	#0-80 UNF
15S	.450	11.43	.345	8.76	.238	6.04	.245	6.22	.125	3.18	.0575	1.46	#0-80 UNF
21P	.525	13.33	.420	10.67	.310	7.87	.320	8.13	.125	3.18	.0575	1.46	#0-80 UNF
21S	.525	13.33	.420	10.67	.313	7.95	.320	8.13	.125	3.18	.0575	1.46	#0-80 UNF
25P	.575	14.60	.470	11.94	.360	9.14	.370	9.40	.125	3.18	.0575	1.46	#0-80 UNF
25S	.575	14.60	.470	11.94	.363	9.22	.370	9.40	.125	3.18	.0575	1.46	#0-80 UNF
31P	.650	16.51	.545	13.84	.435	11.05	.445	11.30	.125	3.18	.0575	1.46	#0-80 UNF
31S	.650	16.51	.545	13.84	.438	11.12	.445	11.30	.125	3.18	.0575	1.46	#0-80 UNF
37P	.725	18.41	.620	15.75	.510	12.95	.520	13.21	.125	3.18	.0575	1.46	#0-80 UNF
37S	.725	18.41	.620	15.75	.513	13.03	.520	13.21	.125	3.18	.0575	1.46	#0-80 UNF
51P	.900	22.86	.795	20.19	.685	17.40	.695	17.65	.125	3.18	.0575	1.46	#0-80 UNF
51S	.900	22.86	.795	20.19	.688	17.47	.695	17.65	.125	3.18	.0575	1.46	#0-80 UNF
65P	1.075	27.30	.970	24.64	.860	21.84	.870	22.10	.125	3.18	.0575	1.46	#0-80 UNF
65S	1.075	27.30	.970	24.64	.863	21.92	.870	22.10	.125	3.18	.0575	1.46	#0-80 UNF
69P	1.125	28.57	1.020	25.91	.910	23.11	.920	23.37	.125	3.18	.0575	1.46	#0-80 UNF
69S	1.125	28.57	1.020	25.91	.913	23.19	.920	23.37	.125	3.18	.0575	1.46	#0-80 UNF
85P	1.377	34.97	1.246	31.65	1.110	28.19	1.120	28.45	.150	3.81	.070	1.78	#2-56 UNC
85S	1.377	34.97	1.246	31.65	1.113	28.27	1.120	28.45	.150	3.81	.070	1.78	#2-56 UNC

© 2013 Glenair, Inc.

GLENAIR, INC. • 1211 AIR WAY • GLENDALE, CA 91201-2497 • 818-247-6000 • FAX 818-500-9912
www.glenair.com E-Mail: sales@glenair.com

891-006 and 891-007
Vertical Mount PCB, Dual Row Nano Connector
Thru Hole Type

Dual Row Thru Hole Vertical Mount PCB Layout—891-006 Plug (Pin) Connector

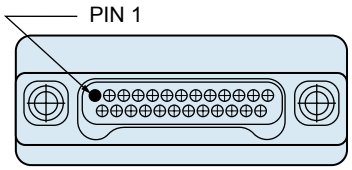

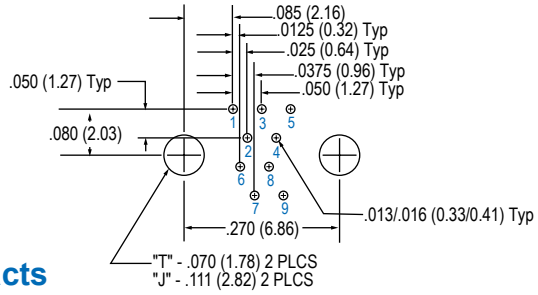

9 Contacts

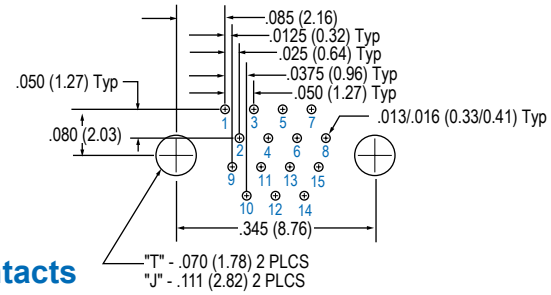

15 Contacts

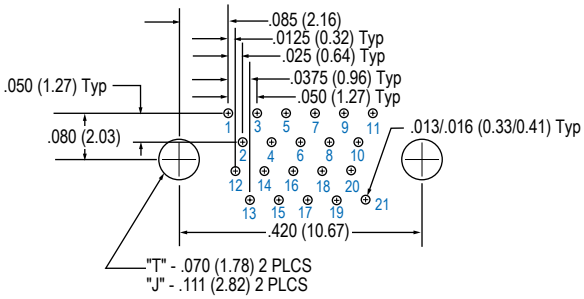

21 Contacts

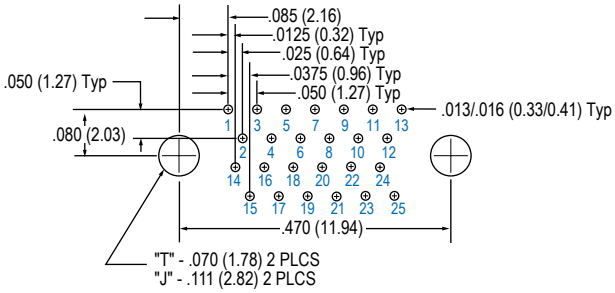

25 Contacts

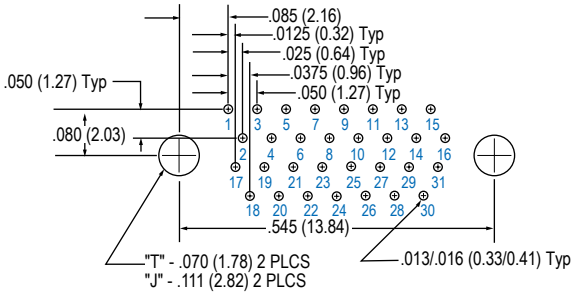

31 Contacts

Layouts shown are for connector mounting side of PC Board.

© 2013 Glenair, Inc.

GLENAIR, INC. • 1211 AIR WAY • GLENDALE, CA 91201-2497 • 818-247-6000 • FAX 818-500-9912
www.glenair.com E-Mail: sales@glenair.com

891-006 and 891-007
Vertical Mount PCB, Dual Row Nano Connector
Thru Hole Type

Dual Row Thru Hole Vertical Mount PCB Layout—891-006 Plug (Pin) Connector

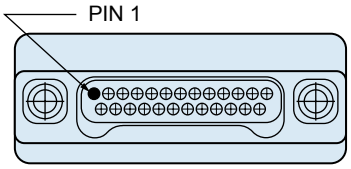

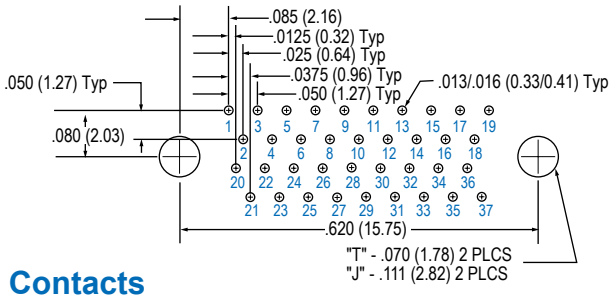

37 Contacts

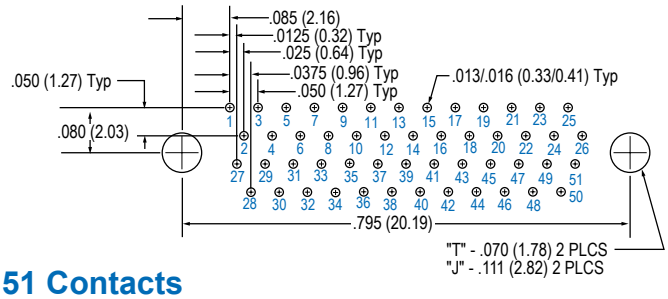

51 Contacts

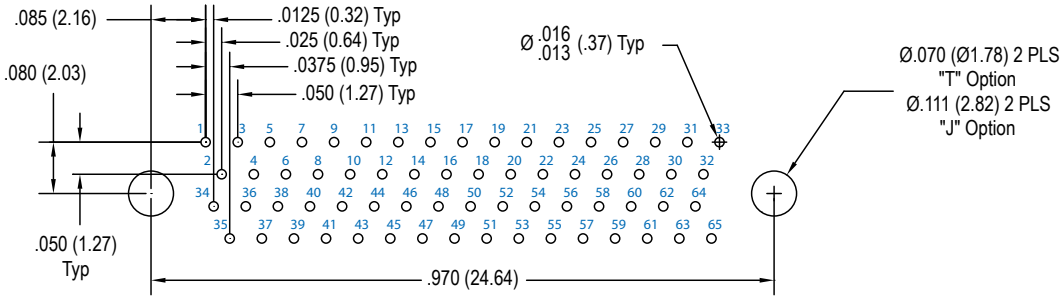

65 Contacts

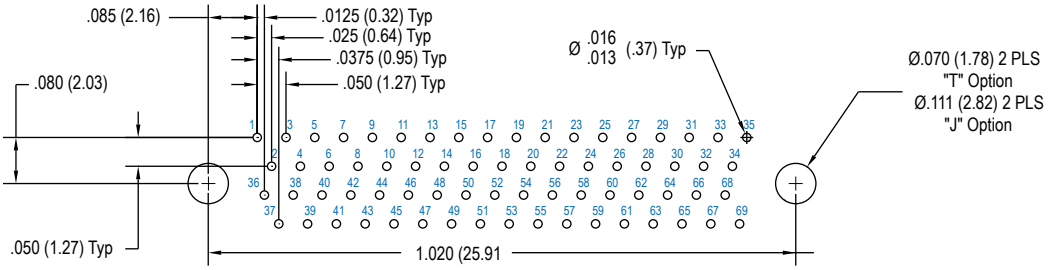

69 Contacts

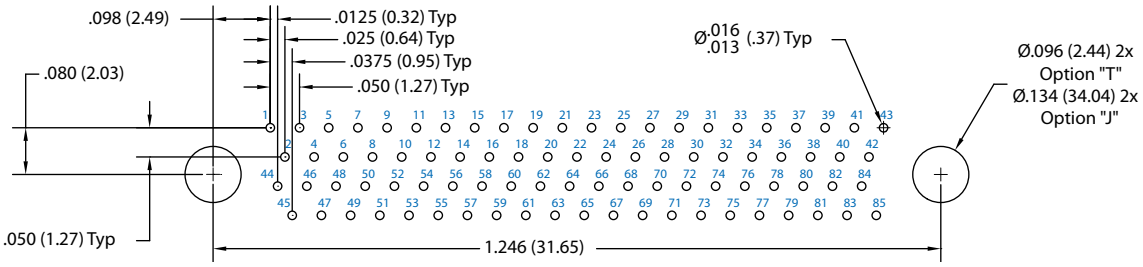

85 Contacts

Layouts shown are for connector mounting side of PC Board.

© 2013 Glenair, Inc.

GLENAIR, INC. • 1211 AIR WAY • GLENDALE, CA 91201-2497 • 818-247-6000 • FAX 818-500-9912
www.glenair.com E-Mail: sales@glenair.com

891-006 and 891-007
Vertical Mount PCB, Dual Row Nano Connector
Thru Hole Type

Dual Row Thru Hole Vertical Mount PCB Layout—891-007 Receptacle (Socket) Connector

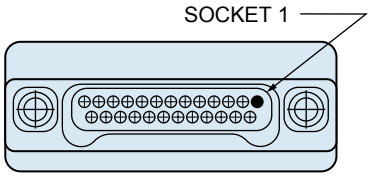

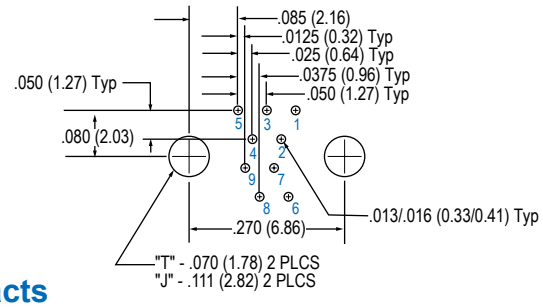

9 Contacts

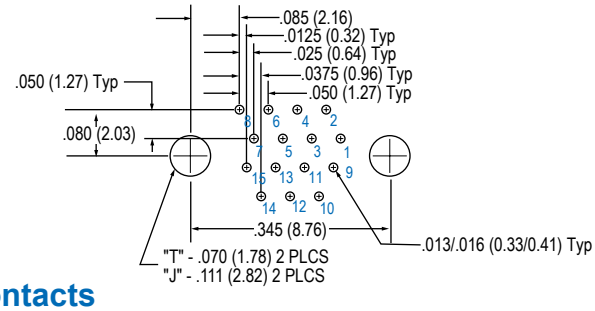

15 Contacts

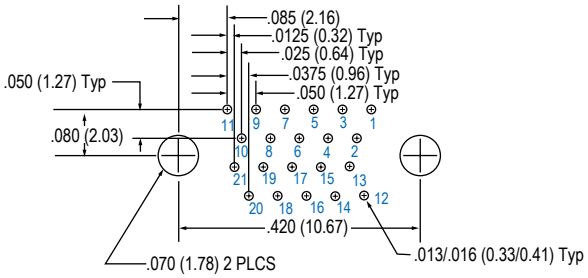

21 Contacts

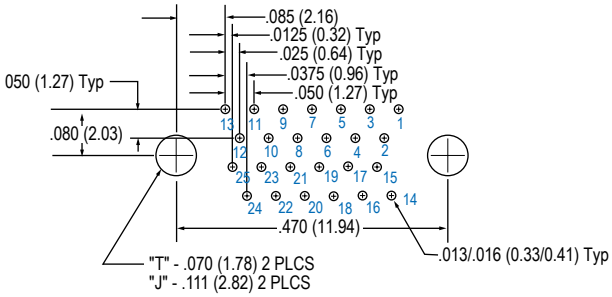

25 Contacts

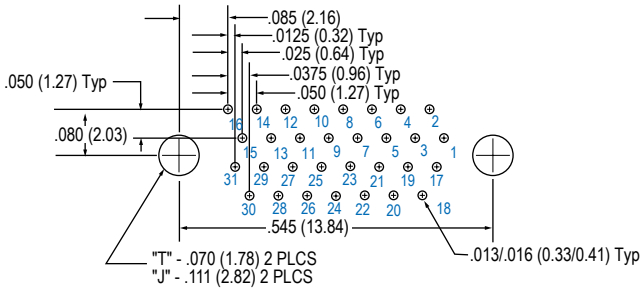

31 Contacts

Layouts shown are for connector mounting side of PC Board.

© 2013 Glenair, Inc.

GLENAIR, INC. • 1211 AIR WAY • GLENDALE, CA 91201-2497 • 818-247-6000 • FAX 818-500-9912
www.glenair.com E-Mail: sales@glenair.com

891-006 and 891-007
Vertical Mount PCB, Dual Row Nano Connector
Thru Hole Type

Dual Row Thru Hole Vertical Mount PCB Layout—891-007 Receptacle (Socket) Connector

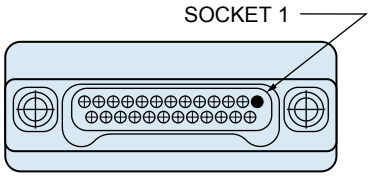

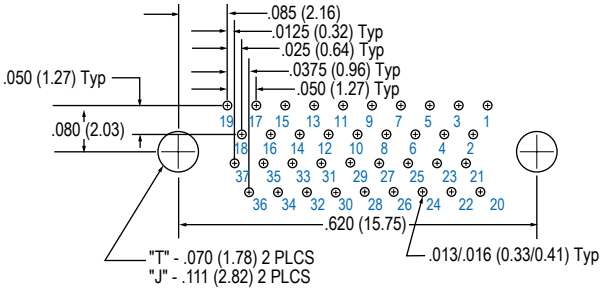

37 Contacts

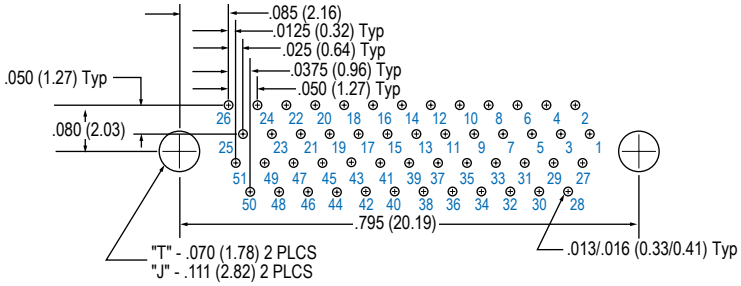

51 Contacts

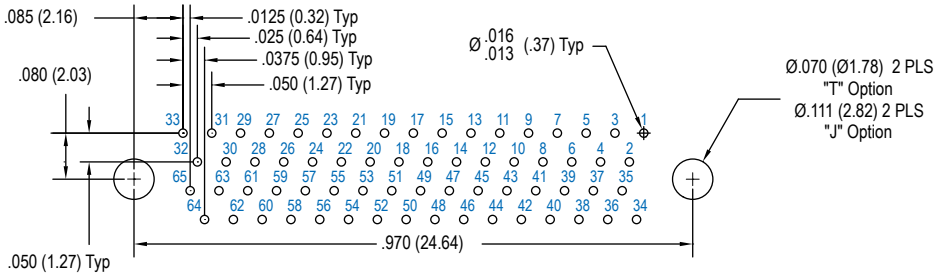

65 Contacts

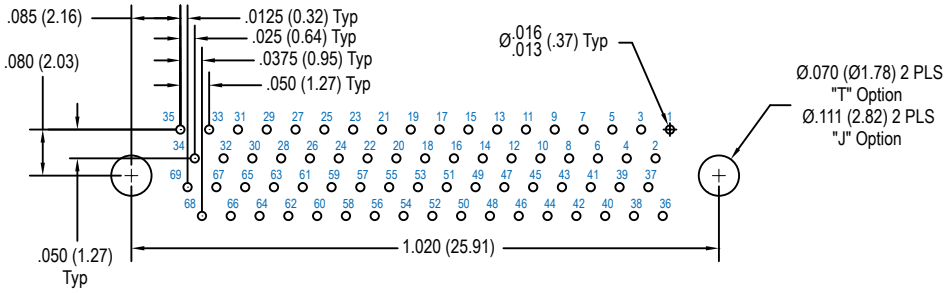

69 Contacts

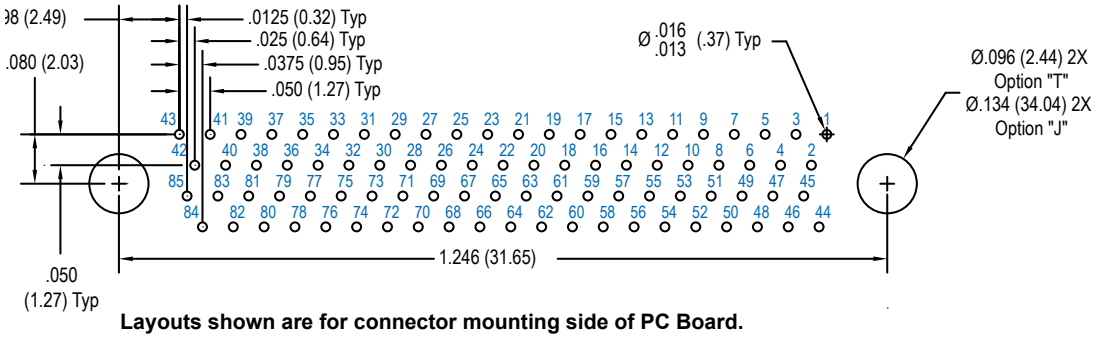

85 Contacts

Layouts shown are for connector mounting side of PC Board.

© 2013 Glenair, Inc.

GLENAIR, INC. • 1211 AIR WAY • GLENDALE, CA 91201-2497 • 818-247-6000 • FAX 818-500-9912
www.glenair.com E-Mail: sales@glenair.com

891-008 and 891-009
Right Angle Mount PCB, Dual Row Nano Connector
Thru Hole Type

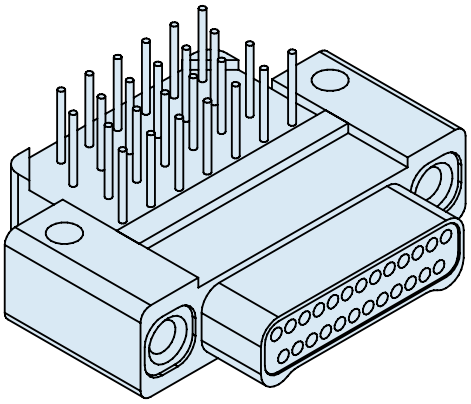

Right Angle Mount PCB Nano Connectors feature gold alloy TwistPin contacts. These nanomimiature connectors offer premium performance and reliability for demanding applications. Available with female threads, or with jackscrews for use with flexible circuits.

Pre-Tinned PC Tails are coated with Sn63Pb37 tin-lead for excellent solderability.

Choose Aluminum, Titanium or Stainless Steel Shells in ten layouts from 9 to 85 contacts. Complies to the requirements of MIL-DTL-32139. These connectors are intermateable with any corresponding Glenair Series 891 Dual row metal shell nanominiature connector.

How to Order Right Angle Mount PCB Connectors

Sample Part Number	891-009	-31S	T	-BRT	1	T
Series	**891-008** Plug, Pin Contacts, Dual Row, Right Angle PCB Nanominiature **891-009** Receptacle, Socket Contacts, Dual Row, Right Angle PCB Nanominiature					
Insert Arrangement/ Contact Type	Plugs (891-008): **9P**, **15P**, **21P**, **25P**, **31P**, **37P**, **51P**, **65P**, **69P**, **85P** Receptacles (891-009): **9S**, **15S**, **21S**, **25S**, **31S**, **37S**, **51S**, **65S**, **69S**, **85S**					
Shell Material and Finish	**A1** - Aluminum Shell, Cadmium Plating **T** - Titanium Shell, Unplated **A2** - Aluminum Shell, Electroless Nickel Plating **S** - Stainless Steel Shell, Passivated					
Termination Type	**BRT** - Board Right Angle Thru-Hole					
PC Tail Length	**1** - .110 Inch (2.79 mm) **2** - .172 Inch (4.37 mm) **3** - .140 (3.56mm)					
Hardware	**J** - Jackscrew **T** - Female Thread					

Dimensions in inches (millimeters) and are subject to change without notice.

© 2013 Glenair, Inc.

GLENAIR, INC. • 1211 AIR WAY • GLENDALE, CA 91201-2497 • 818-247-6000 • FAX 818-500-9912
www.glenair.com E-Mail: sales@glenair.com

891-008 and 891-009
Right Angle Mount PCB, Dual Row Nano Connector
Thru Hole Type

Dual Row Right Angle PCB Nano Dimensions

891-008 Plug (Pin) Connectors

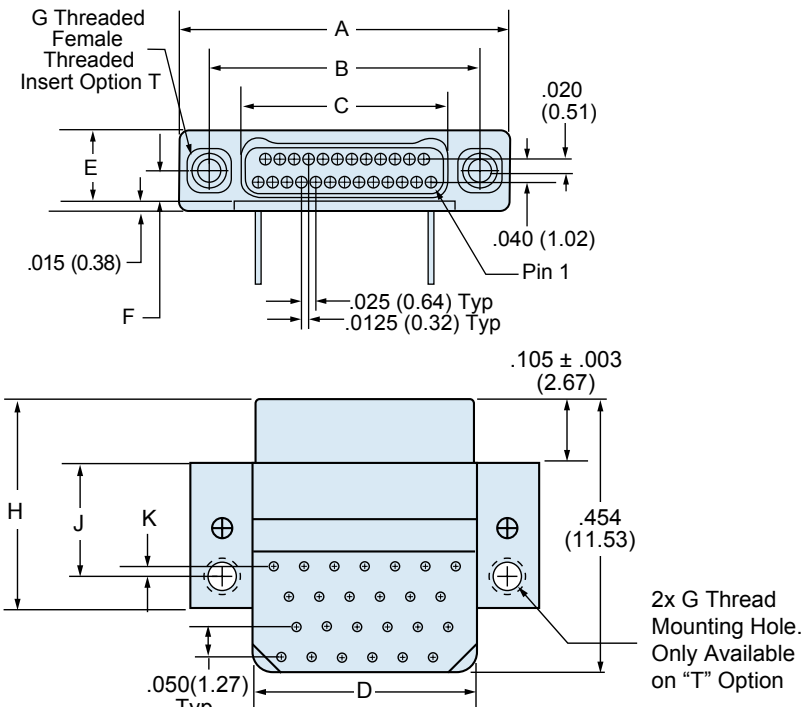

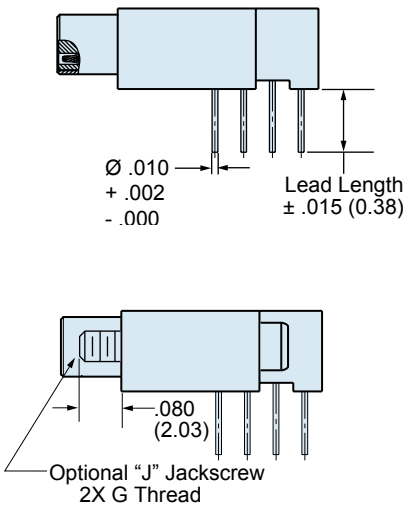

Table continued on right

Layout	A		B BSC.		C BSC.		D		G THREAD
	In. ± .005	mm. ± 0.13	In.	mm.	In.	mm.	In. ± .005	mm. ± 0.13	
9P	.375	9.52	.270	6.86	.160	4.06	.170	4.32	#0-80 UNF
9S	.375	9.52	.270	6.86	.163	4.14	.170	4.32	#0-80 UNF
15P	.450	11.43	.345	8.76	.235	5.97	.245	6.22	#0-80 UNF
15S	.450	11.43	.345	8.76	.238	6.04	.245	6.22	#0-80 UNF
21P	.525	13.33	.420	10.67	.310	7.87	.320	8.13	#0-80 UNF
21S	.525	13.33	.420	10.67	.313	7.95	.320	8.13	#0-80 UNF
25P	.575	14.60	.470	11.94	.360	9.14	.370	9.40	#0-80 UNF
25S	.575	14.60	.470	11.94	.363	9.22	.370	9.40	#0-80 UNF
31P	.650	16.51	.545	13.84	.435	11.05	.445	11.30	#0-80 UNF
31S	.650	16.51	.545	13.84	.438	11.12	.445	11.30	#0-80 UNF
37P	.725	18.41	.620	15.75	.510	12.95	.520	13.21	#0-80 UNF
37S	.725	18.41	.620	15.75	.513	13.03	.520	13.21	#0-80 UNF
51P	.900	22.86	.795	20.19	.685	17.40	.695	17.65	#0-80 UNF
51S	.900	22.86	.795	20.19	.688	17.47	.695	17.65	#0-80 UNF
65P	1.075	27.30	.970	24.64	.860	21.84	.870	22.10	#0-80 UNF
65S	1.075	27.30	.970	24.64	.863	21.92	.870	22.10	#0-80 UNF
69P	1.125	28.57	1.020	25.91	.910	23.11	.920	23.37	#0-80 UNF
69S	1.125	28.57	1.020	25.91	.913	23.19	.920	23.37	#0-80 UNF
85P	1.377	34.97	1.246	31.65	1.110	28.19	1.120	28.45	#2-56 UNC
85S	1.377	34.97	1.246	31.65	1.113	28.27	1.120	28.45	#2-56 UNC

© 2013 Glenair, Inc.

GLENAIR, INC. • 1211 AIR WAY • GLENDALE, CA 91201-2497 • 818-247-6000 • FAX 818-500-9912
www.glenair.com E-Mail: sales@glenair.com

891-008 and 891-009
Right Angle Mount PCB, Dual Row Nano Connector
Thru Hole Type

Dual Row Right Angle PCB Nano Dimensions

891-009 Receptacle (Socket) Connectors

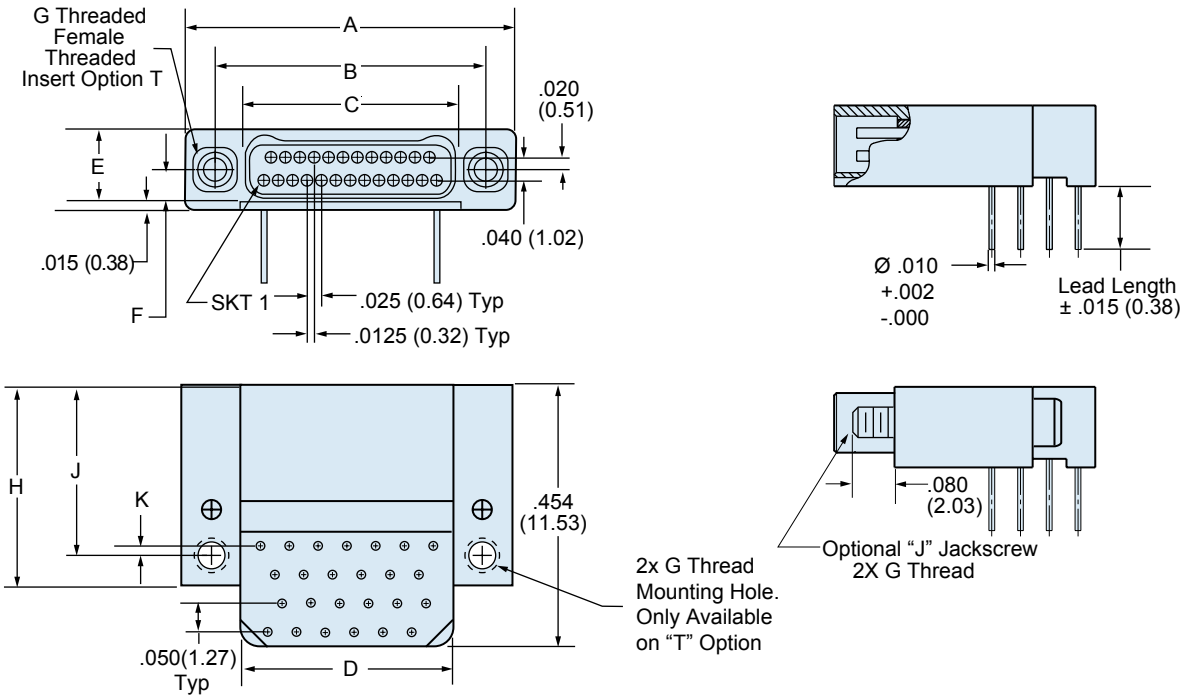

Layout	E		F BSC		H		J		K		G THREAD
	In. ±.005	mm ±0.13	In.	mm	In. ±.005	mm ± 0.13	In. ± .005	mm ± 0.13	In. ±.005	mm ±0.13	
9P	.125	3.18	.0575	1.46	.345	8.76	.187	4.75	.018	.46	#0-80 UNF
9S	.125	3.18	.0575	1.46	.345	8.76	.292	7.42	.018	.46	#0-80 UNF
15P	.125	3.18	.0575	1.46	.345	8.76	.187	4.75	.018	.46	#0-80 UNF
15S	.125	3.18	.0575	1.46	.345	8.76	.292	7.42	.018	.46	#0-80 UNF
21P	.125	3.18	.0575	1.46	.345	8.76	.187	4.75	.018	.46	#0-80 UNF
21S	.125	3.18	.0575	1.46	.345	8.76	.292	7.42	.018	.46	#0-80 UNF
25P	.125	3.18	.0575	1.46	.345	8.76	.187	4.75	.018	.46	#0-80 UNF
25S	.125	3.18	.0575	1.46	.345	8.76	.292	7.42	.018	.46	#0-80 UNF
31P	.125	3.18	.0575	1.46	.345	8.76	.187	4.75	.018	.46	#0-80 UNF
31S	.125	3.18	.0575	1.46	.345	8.76	.292	7.42	.018	.46	#0-80 UNF
37P	.125	3.18	.0575	1.46	.345	8.76	.187	4.75	.018	.46	#0-80 UNF
37S	.125	3.18	.0575	1.46	.345	8.76	.292	7.42	.018	.46	#0-80 UNF
51P	.125	3.18	.0575	1.46	.345	8.76	.187	4.75	.018	.46	#0-80 UNF
51S	.125	3.18	.0575	1.46	.345	8.76	.292	7.42	.018	.46	#0-80 UNF
65P	.125	3.18	.0575	1.46	.345	8.76	.187	4.75	.018	.46	#0-80 UNF
65S	.125	3.18	.0575	1.46	.345	8.76	.292	7.42	.018	.46	#0-80 UNF
69P	.125	3.18	.0575	1.46	.345	8.76	.187	4.75	.018	.46	#0-80 UNF
69S	.125	3.18	.0575	1.46	.345	8.76	.292	7.42	.018	.46	#0-80 UNF
85P	.150	3.81	.070	1.78	.410	10.42	.244	6.19	.075	1.90	#2-56 UNC
85S	.150	3.81	.070	1.78	.345	8.76	.292	7.42	.018	.45	#2-56 UNC

© 2013 Glenair, Inc.

GLENAIR, INC. • 1211 AIR WAY • GLENDALE, CA 91201-2497 • 818-247-6000 • FAX 818-500-9912
www.glenair.com E-Mail: sales@glenair.com

891-008 and 891-009
Right Angle Mount PCB, Dual Row Nano Connector
Thru Hole Type

Dual Row Thru Hole Right Angle PCB Layout—891-008 Plug (Pin) Connectors

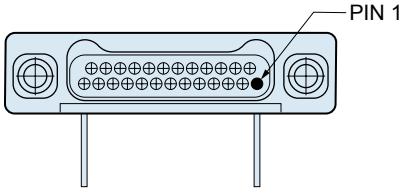

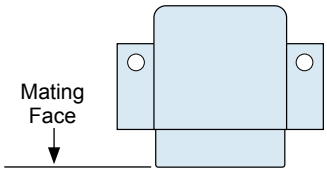

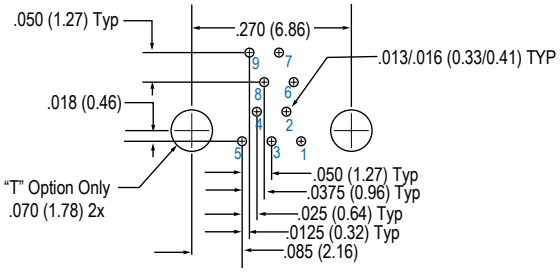

9 Contacts

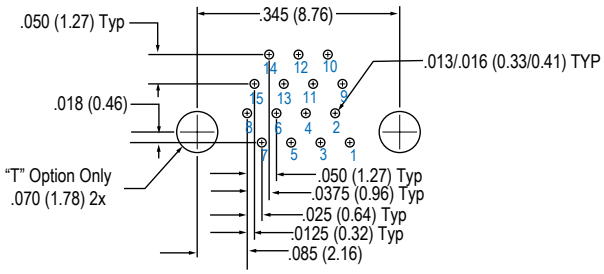

15 Contacts

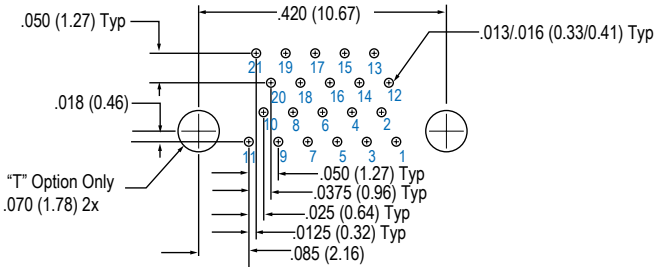

21 Contacts

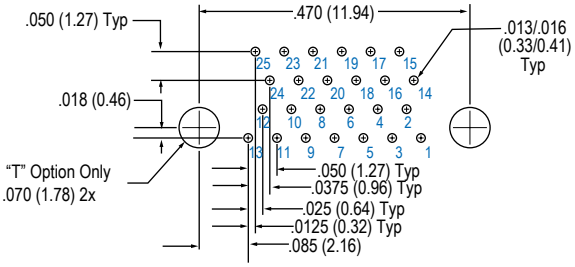

25 Contacts

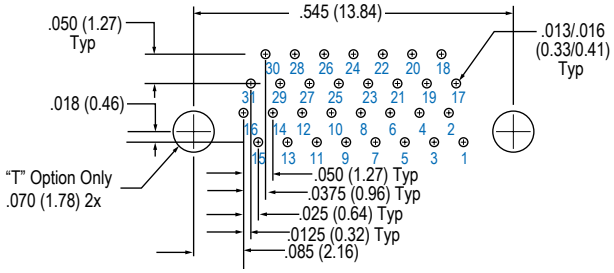

31 Contacts

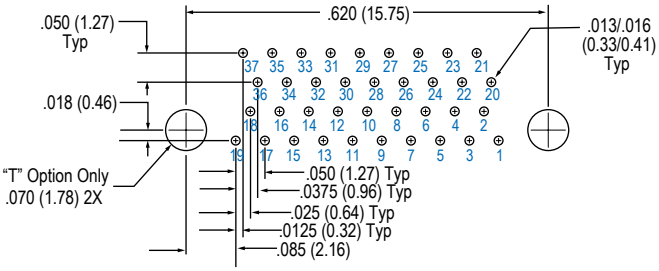

37 Contacts

Layouts shown are for connector mounting side of PC Board.

© 2013 Glenair, Inc.

GLENAIR, INC. • 1211 AIR WAY • GLENDALE, CA 91201-2497 • 818-247-6000 • FAX 818-500-9912
www.glenair.com E-Mail: sales@glenair.com

891-008
Right Angle Mount PCB, Dual Row Nano Connector
Thru Hole Type

Dual Row Thru Hole Right Angle PCB Layout—891-008 Plug (Pin) Connectors

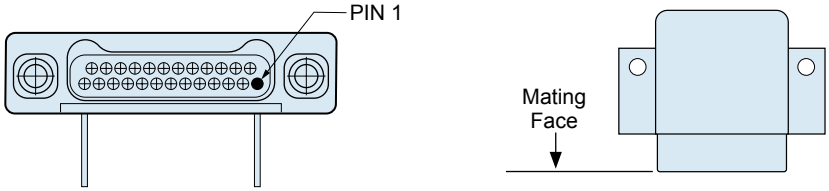

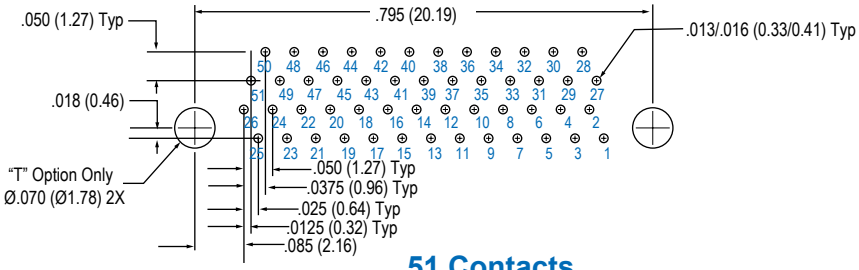

51 Contacts

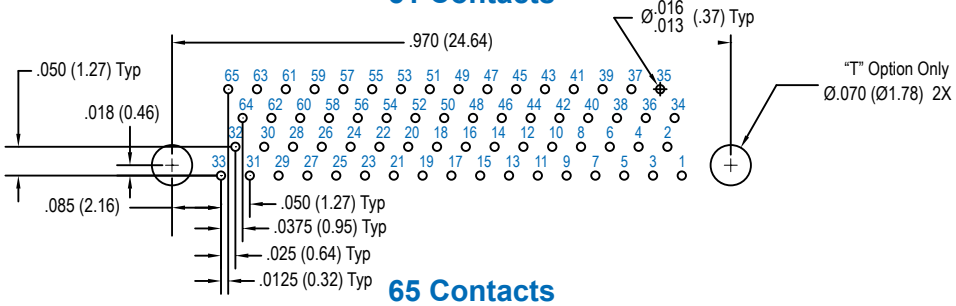

65 Contacts

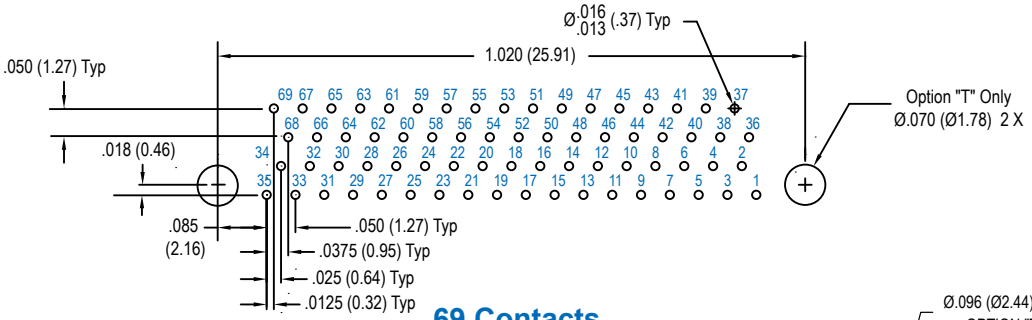

69 Contacts

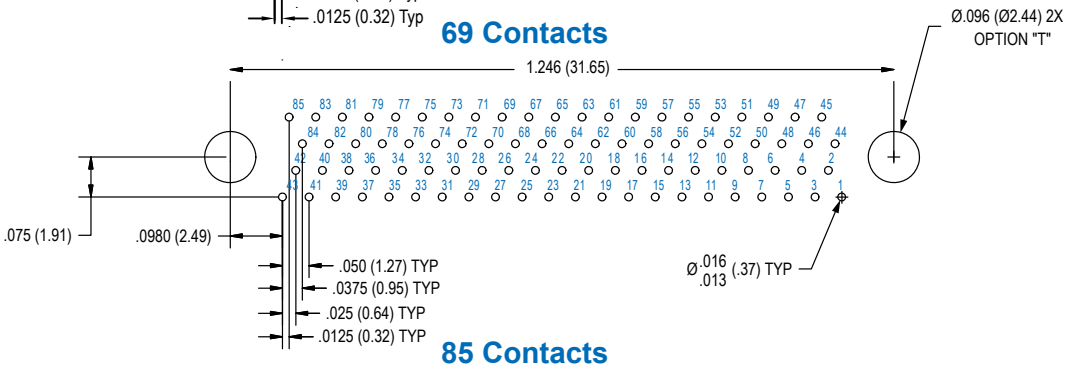

85 Contacts

Layouts shown are for connector mounting side of PC Board.

891-009
Right Angle Mount PCB, Dual Row Nano Connector
Thru Hole Type

Dual Row Thru Hole Right Angle PCB Layout—891-009 Receptacles (Sockets) Connectors

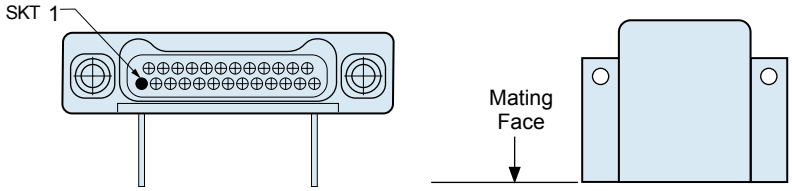

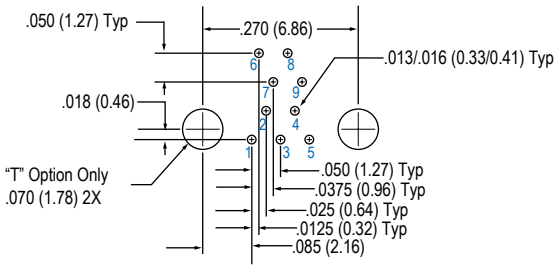

9 Contacts

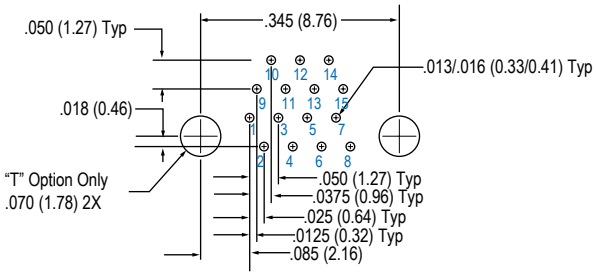

15 Contacts

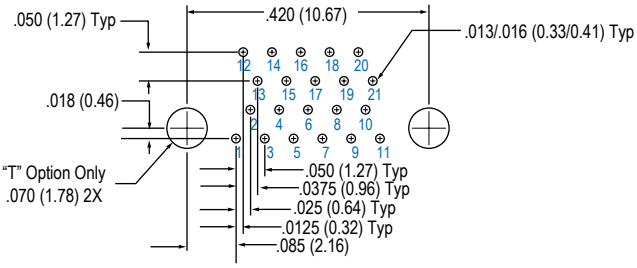

21 Contacts

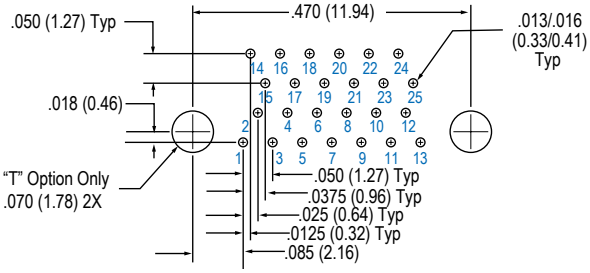

25 Contacts

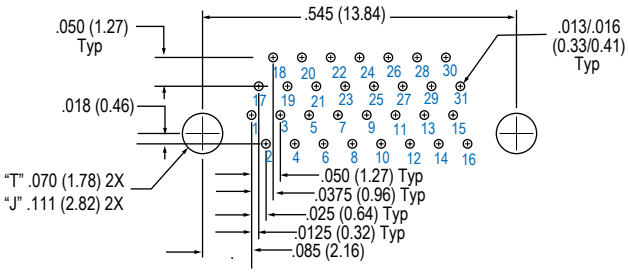

31 Contacts

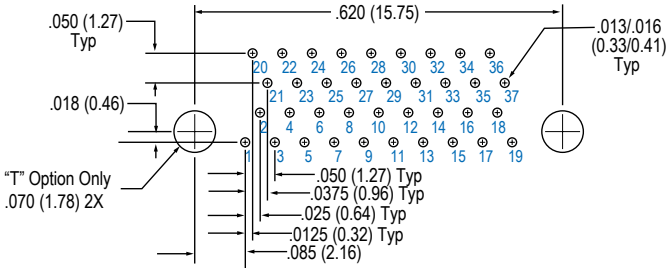

37 Contacts

Layouts shown are for connector mounting side of PC Board.

© 2013 Glenair, Inc.

GLENAIR, INC. • 1211 AIR WAY • GLENDALE, CA 91201-2497 • 818-247-6000 • FAX 818-500-9912
www.glenair.com E-Mail: sales@glenair.com

891-009
Right Angle Mount PCB, Dual Row Nano Connector
Thru Hole Type

Dual Row Thru Hole Right Angle PCB Layout—891-009 Receptacles (Sockets) Connectors

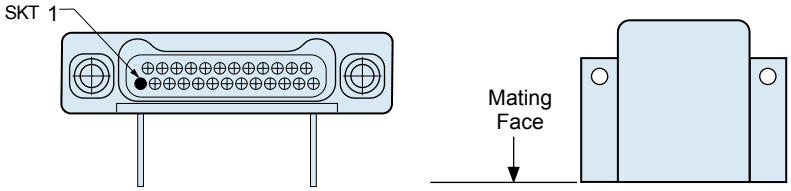

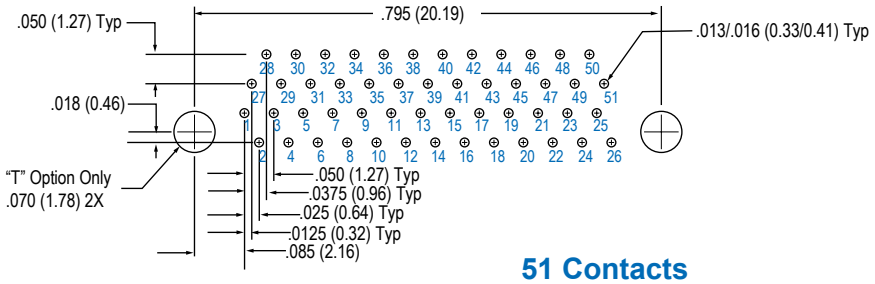

51 Contacts

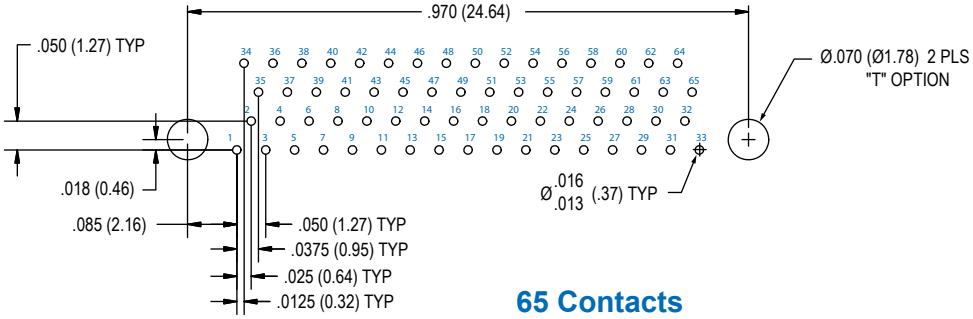

65 Contacts

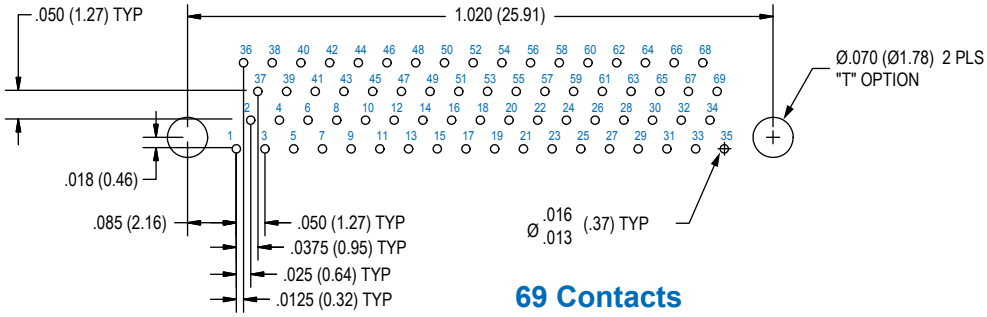

69 Contacts

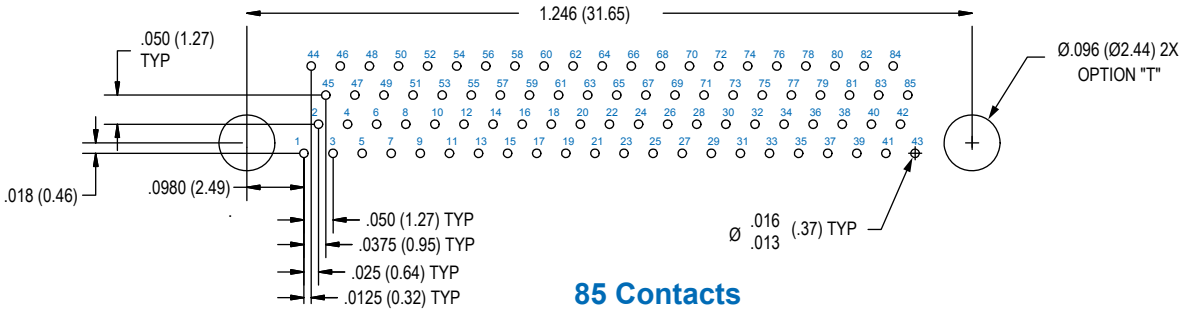

85 Contacts

Layouts shown are for connector mounting side of PC Board.

© 2013 Glenair, Inc.

GLENAIR, INC. • 1211 AIR WAY • GLENDALE, CA 91201-2497 • 818-247-6000 • FAX 818-500-9912
www.glenair.com E-Mail: sales@glenair.com

891-010 and 891-011
Vertical Mount PCB, Dual Row Nano Connector
Surface Mount Type

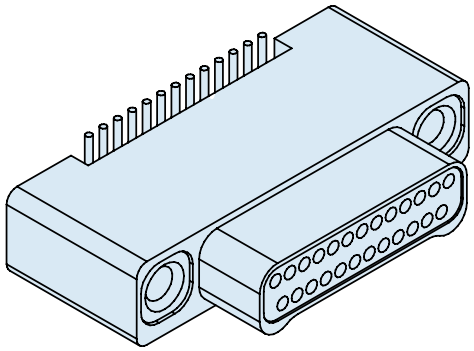

Vertical Surface Mount PCB Nano Connectors feature gold alloy TwistPin contacts. Contacts are precision-crimped #30 AWG gold-plated wire. These nanomimiature connectors offer premium performance and reliability for demanding applications.

Pre-Tinned PC Tails are coated with Sn63Pb37 tin-lead for excellent solderability.

Choose Aluminum, Titanium or Stainless Steel Shells in ten layouts from 9 to 85 contacts. Complies to the requirements of MIL-DTL-32139.

How to Order Vertical Mount SMT Connectors

Sample Part Number	891-011	-51S	A2	-BSS	T
Series	**891-010** Plug, Pin Contacts, Dual Row, Vertical SMT Nanominiature **891-011** Receptacle, Socket Contacts, Dual Row, Vertical SMT Nanominiature				
Insert Arrangement/ Contact Type	Plugs (891-010): **9P**, **15P**, **21P**, **25P**, **31P**, **37P**, **51P**, **65P**, **69P**, **85P** Receptacles (891-011): **9S**, **15S**, **21S**, **25S**, **31S**, **37S**, **51S**, **65S**, **69S**, **85S**				
Shell Material and Finish	**A1** - Aluminum Shell, Cadmium Plating **A2** - Aluminum Shell, Electroless Nickel Plating **T** - Titanium Shell, Unplated **S** - Stainless Steel Shell, Passivated				
Termination Type	**BSS** - Board Surface Mount Straight”				
Hardware	**T** - Female Thread				

Dimensions in inches (millimeters) and are subject to change without notice.

© 2013 Glenair, Inc.

GLENAIR, INC. • 1211 AIR WAY • GLENDALE, CA 91201-2497 • 818-247-6000 • FAX 818-500-9912
www.glenair.com E-Mail: sales@glenair.com

891-010 and 891-011
Vertical Mount PCB, Dual Row Nano Connector
Surface Mount Type

Dual Row Vertical Surface Mount Nano Dimensions

891-010 Plug (Pin) Connectors

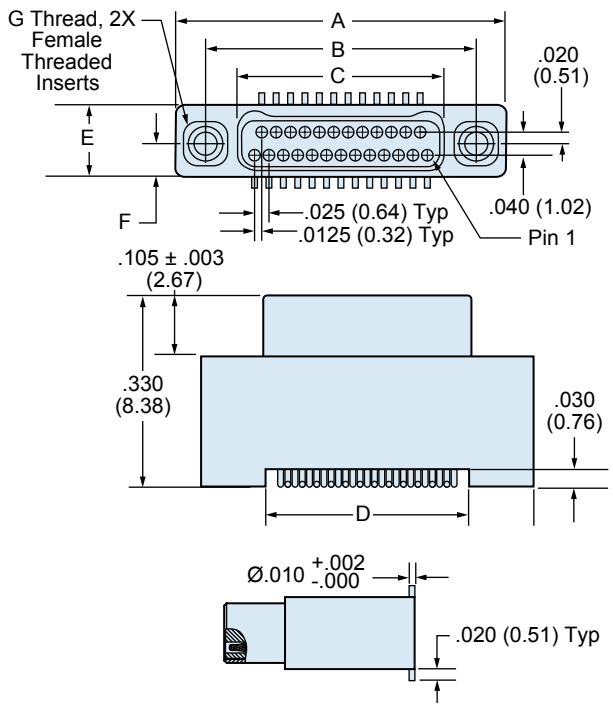

891-011 Receptacle (Socket) Connectors

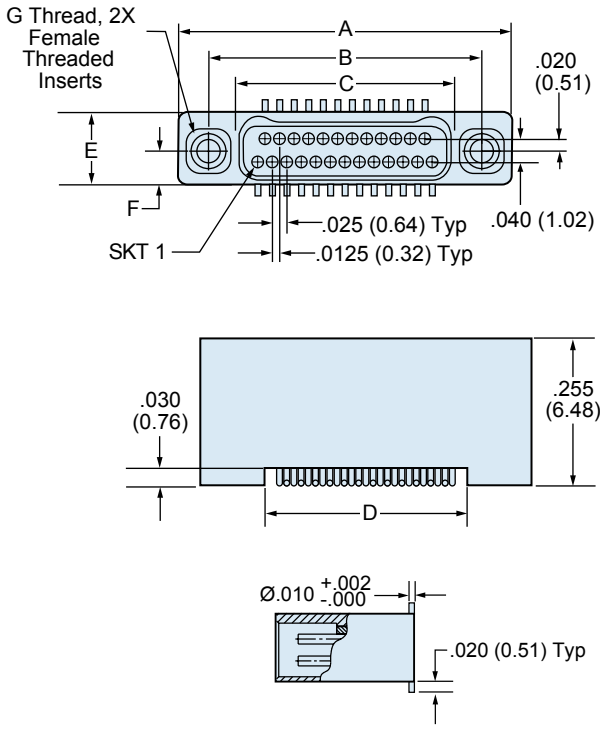

Layout	A		B BSC.		C BSC.		D		E		F BSC.		G Thread
	In. ± .005	mm. ± 0.13	In.	mm.	In.	mm.	In. ± .005	mm. ± 0.13	In. ± .005	mm± 0.13	In.	mm	
9P	.375	9.52	.270	6.86	.160	4.06	.152	3.86	.125	3.18	.0575	1.46	#0-80 UNF
9S	.375	9.52	.270	6.86	.163	4.14	.152	3.86	.125	3.18	.0575	1.46	#0-80 UNF
15P	.450	11.43	.345	8.76	.235	5.97	.227	5.77	.125	3.18	.0575	1.46	#0-80 UNF
15S	.450	11.43	.345	8.76	.238	6.04	.227	5.77	.125	3.18	.0575	1.46	#0-80 UNF
21P	.525	13.33	.420	10.67	.310	7.87	.302	7.67	.125	3.18	.0575	1.46	#0-80 UNF
21S	.525	13.33	.420	10.67	.313	7.95	.302	7.67	.125	3.18	.0575	1.46	#0-80 UNF
25P	.575	14.60	.470	11.94	.360	9.14	.352	8.94	.125	3.18	.0575	1.46	#0-80 UNF
25S	.575	14.60	.470	11.94	.363	9.22	.352	8.94	.125	3.18	.0575	1.46	#0-80 UNF
31P	.650	16.51	.545	13.84	.435	11.05	.427	10.85	.125	3.18	.0575	1.46	#0-80 UNF
31S	.650	16.51	.545	13.84	.438	11.12	.427	10.85	.125	3.18	.0575	1.46	#0-80 UNF
37P	.725	18.41	.620	15.75	.510	12.95	.502	12.75	.125	3.18	.0575	1.46	#0-80 UNF
37S	.725	18.41	.620	15.75	.513	13.03	.502	12.75	.125	3.18	.0575	1.46	#0-80 UNF
51P	.900	22.86	.795	20.19	.685	17.40	.677	17.20	.125	3.18	.0575	1.46	#0-80 UNF
51S	.900	22.86	.795	20.19	.688	17.47	.677	17.20	.125	3.18	.0575	1.46	#0-80 UNF
65P	1.075	27.30	.970	24.64	.860	21.84	.852	21.64	.125	3.18	.0575	1.46	#0-80 UNF
65S	1.075	27.30	.970	24.64	.863	21.92	.852	21.64	.125	3.18	.0575	1.46	#0-80 UNF
69P	1.125	28.57	1.020	25.91	.910	23.11	.902	22.91	.125	3.18	.0575	1.46	#0-80 UNF
69S	1.125	28.57	1.020	25.91	.913	23.19	.902	22.91	.125	3.18	.0575	1.46	#0-80 UNF
85P	1.377	34.97	1.246	31.65	1.110	28.19	1.102	27.99	.150	3.81	.070	1.78	#2-56 UNC
85S	1.377	34.97	1.246	31.65	1.113	28.27	1.102	27.99	.150	3.81	.070	1.78	#2-56 UNC

© 2013 Glenair, Inc.

GLENAIR, INC. • 1211 AIR WAY • GLENDALE, CA 91201-2497 • 818-247-6000 • FAX 818-500-9912
www.glenair.com E-Mail: sales@glenair.com

891-010 and 891-011
Vertical Mount PCB, Dual Row Nano Connector
Surface Mount Type

Dual Row Vertical Surface Mount Board Layout — 891-010 Plugs (Pin) Connectors

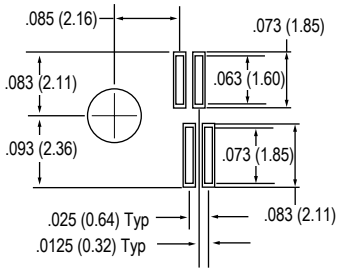

PAD/ FOOTPRINT DETAIL

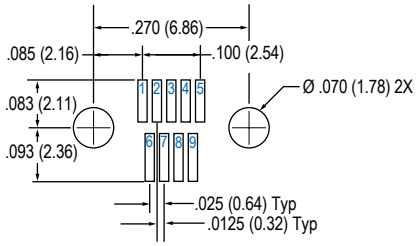

9 Contacts

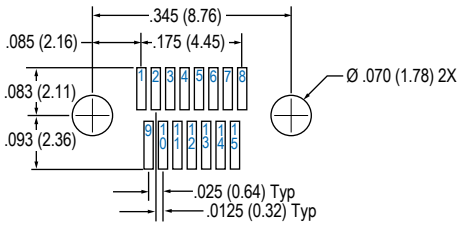

15 Contacts

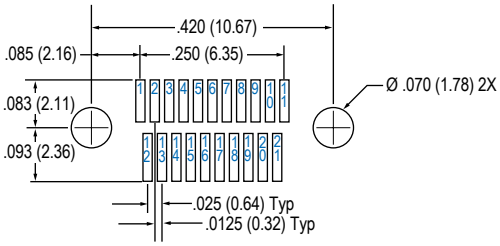

21 Contacts

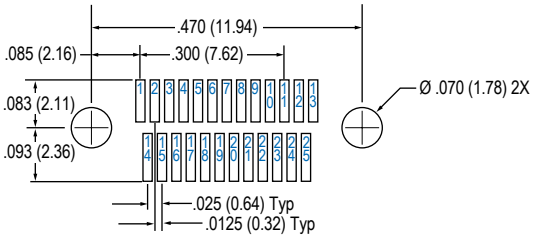

25 Contacts

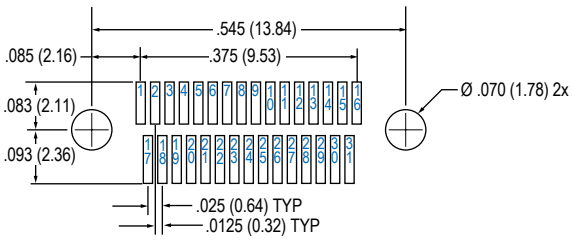

31 Contacts

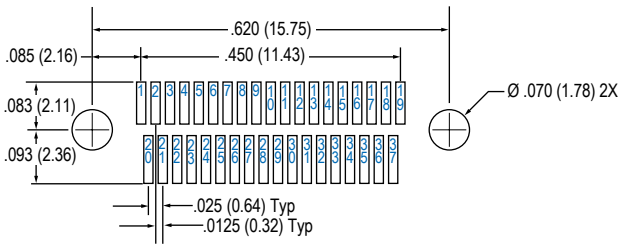

37 Contacts

Layouts shown are for connector mounting side of PC Board.

© 2013 Glenair, Inc.

GLENAIR, INC. • 1211 AIR WAY • GLENDALE, CA 91201-2497 • 818-247-6000 • FAX 818-500-9912
www.glenair.com E-Mail: sales@glenair.com

891-010 and 891-011
Vertical Mount PCB, Dual Row Nano Connector
Surface Mount Type

Dual Row Vertical Surface Mount Board Layout — 891-010 Plugs (Pin) Connectors

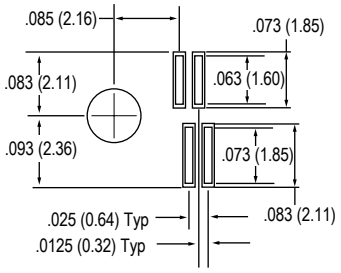

PAD/ FOOTPRINT DETAIL

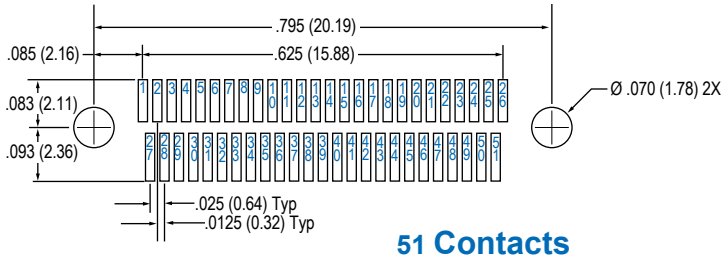

51 Contacts

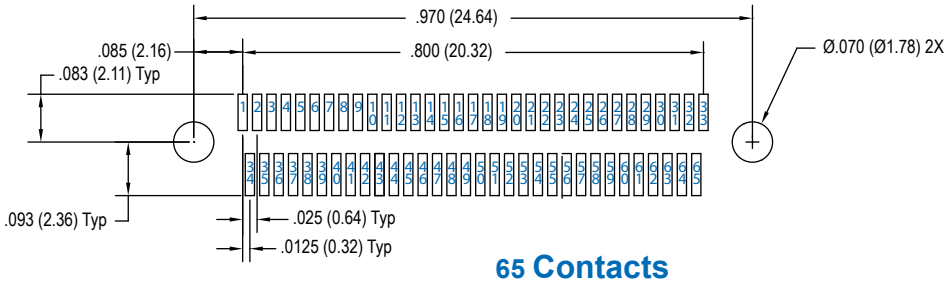

65 Contacts

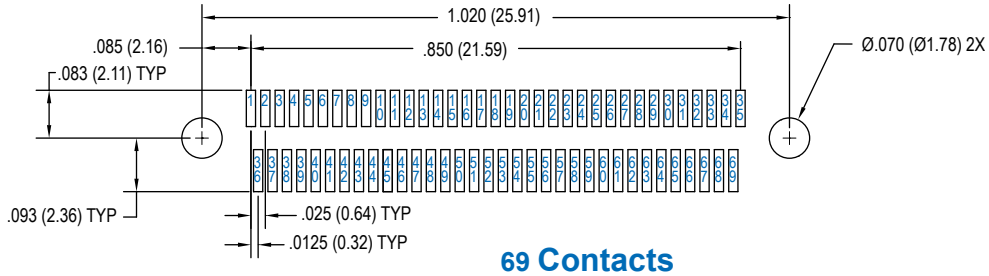

69 Contacts

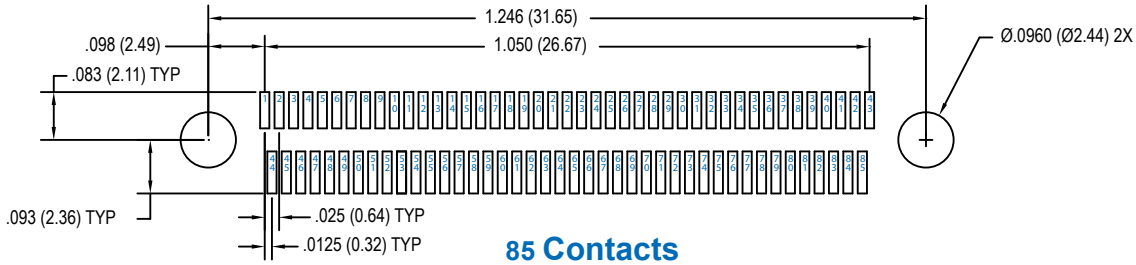

85 Contacts

Layouts shown are for connector mounting side of PC Board.

© 2013 Glenair, Inc.

GLENAIR, INC. • 1211 AIR WAY • GLENDALE, CA 91201-2497 • 818-247-6000 • FAX 818-500-9912
www.glenair.com E-Mail: sales@glenair.com

891-010 and 891-011
Vertical Mount PCB, Dual Row Nano Connector
Surface Mount Type

Dual Row Vertical Surface Mount Board Layout — 891-011 Receptacle (Socket) Connectors

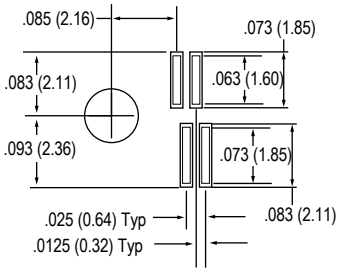

PAD/ FOOTPRINT DETAIL

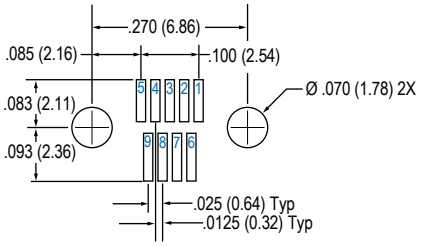

9 Contacts

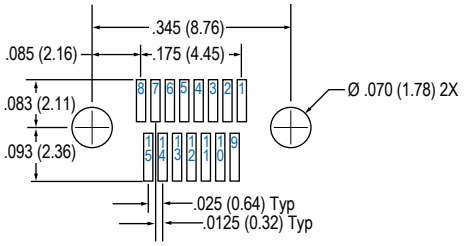

15 Contacts

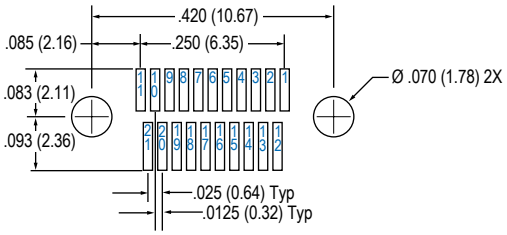

21 Contacts

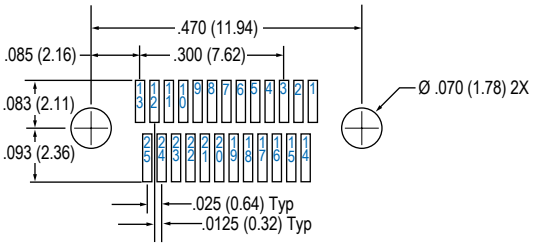

25 Contacts

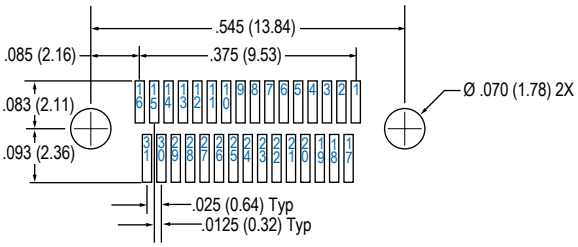

31 Contacts

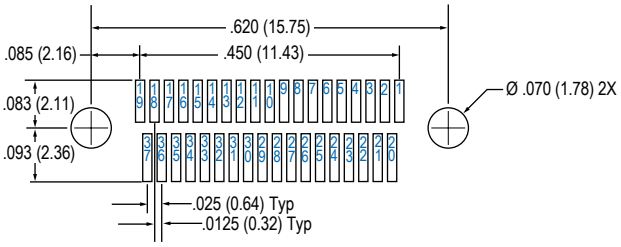

37 Contacts

Layouts shown are for connector mounting side of PC Board.

© 2013 Glenair, Inc.

GLENAIR, INC. • 1211 AIR WAY • GLENDALE, CA 91201-2497 • 818-247-6000 • FAX 818-500-9912
www.glenair.com E-Mail: sales@glenair.com

891-010 and 891-011
Vertical Mount PCB, Dual Row Nano Connector
Surface Mount Type

Dual Row Vertical Surface Mount Board Layout—891-011 Receptacle (Socket) Connectors

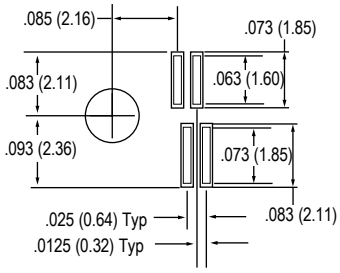

PAD/ FOOTPRINT DETAIL

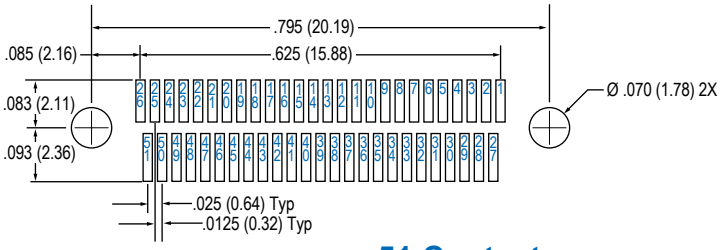

51 Contacts

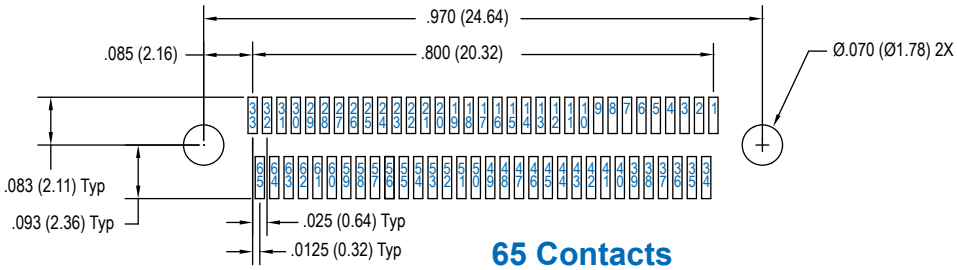

65 Contacts

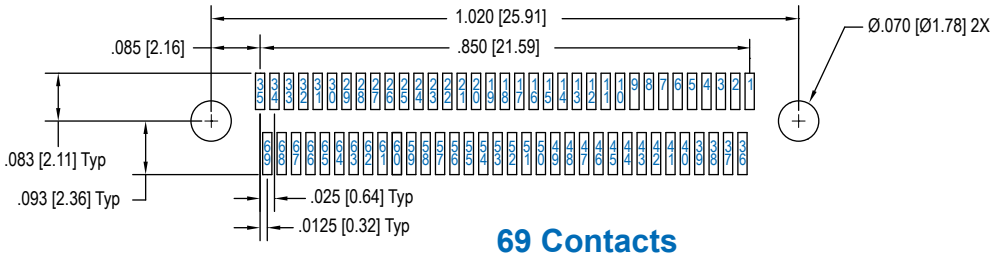

69 Contacts

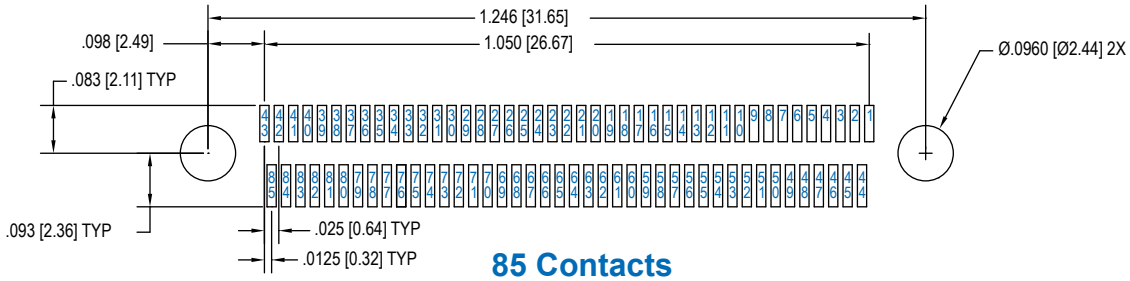

85 Contacts

Layouts shown are for connector mounting side of PC Board.

© 2013 Glenair, Inc.

GLENAIR, INC. • 1211 AIR WAY • GLENDALE, CA 91201-2497 • 818-247-6000 • FAX 818-500-9912
www.glenair.com E-Mail: sales@glenair.com

891-012 and 891-013
Right Angle Mount PCB, Dual Row Nano Connector
Surface Mount Type

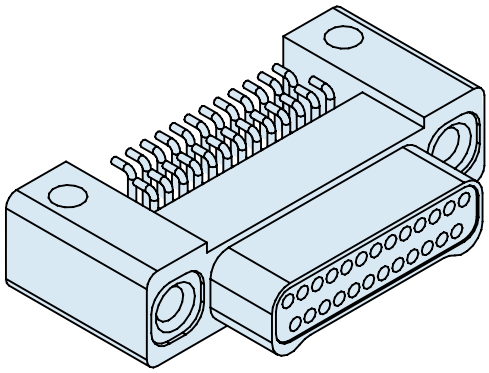

Right Angle Surface PCB Nano Connectors feature gold alloy TwistPin contacts. These nanomimiature connectors offer premium performance and reliability for demanding applications. Available with female threads, or with jackscrews for use with flexible circuits.

Pre-Tinned PC Tails are coated with Sn63Pb37 tin-lead for excellent solderability.

Choose Aluminum, Titanium or Stainless Steel Shells in ten layouts from 9 to 85 contacts. Complies to the requirements of MIL-DTL-32139.

How to Order Right Angle Surface Mount PCB Connectors					
Sample Part Number	891-012	-25P	A1	-BRS	T
Series	**891-012** Plug, Pin Contacts, Dual Row, Right Angle Surface Mount Nanominiature **891-013** Receptacle, Socket Contacts, Dual Row, Right Angle Surface Mount Nanominiature				
Insert Arrangement/ Contact Type	Plugs (891-012) **9P**, **15P**, **21P**, **25P**, **31P**, **37P**, **51P**, **65P**, **69P**, **85P** Receptacles (891-013) **9S**, **15S**, **21S**, **25S**, **31S**, **37S**, **51S**, **65S**, **69S**, **85S**				
Shell Material and Finish	**A1** - Aluminum Shell, Cadmium Plating **A2** - Aluminum Shell, Electroless Nickel Plating **T** - Titanium Shell, Unplated **S** - Stainless Steel Shell, Passivated				
Termination Type	**BRS -** Board Right Angle Surface Mount				
Hardware	**T** - Female Thread				

Dimensions in inches (millimeters) and are subject to change without notice.

© 2013 Glenair, Inc.

GLENAIR, INC. • 1211 AIR WAY • GLENDALE, CA 91201-2497 • 818-247-6000 • FAX 818-500-9912
www.glenair.com E-Mail: sales@glenair.com

891-012 and 891-013
Right Angle Mount PCB, Dual Row Nano Connector
Surface Mount Type

Glenair®

Dual Row Right Angle Surface Mount Nano Dimensions

891-012 Plug (Pin) Connectors

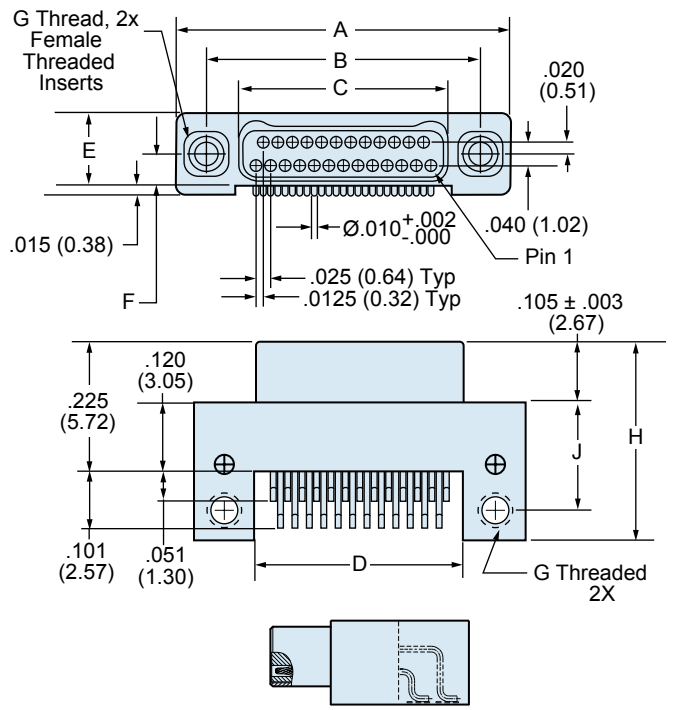

891-013 Receptacle (Socket) Connectors

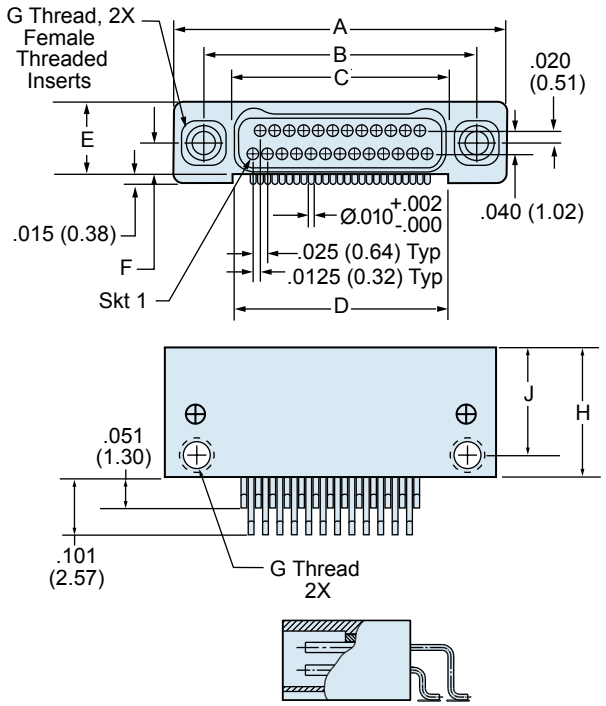

Layout	A		B BSC.		C BSC.		D		E		F BSC.		H		J		G Thread
	In. ± .005	mm. ± 0.13	In.	mm.	In.	mm.	In. ± .005	mm. ± 0.13	In. ± .005	mm± 0.13	In.	mm	In. ±.005	mm ±0.13	In. ± .005	mm ±0.13	
9P	.375	9.52	.270	6.86	.160	4.06	.170	4.32	.125	3.18	.0575	1.46	.345	8.76	.187	4.75	#0-80 UNF
9S	.375	9.52	.270	6.86	.163	4.14	.170	4.32	.125	3.18	.0575	1.46	.225	5.71	.187	4.75	#0-80 UNF
15P	.450	11.43	.345	8.76	.235	5.97	.245	6.22	.125	3.18	.0575	1.46	.345	8.76	.187	4.75	#0-80 UNF
15S	.450	11.43	.345	8.76	.238	6.04	.245	6.22	.125	3.18	.0575	1.46	.225	5.71	.187	4.75	#0-80 UNF
21P	.525	13.33	.420	10.67	.310	7.87	.320	8.13	.125	3.18	.0575	1.46	.345	8.76	.187	4.75	#0-80 UNF
21S	.525	13.33	.420	10.67	.313	7.95	.320	8.13	.125	3.18	.0575	1.46	.225	5.71	.187	4.75	#0-80 UNF
25P	.575	14.60	.470	11.94	.360	9.14	.370	9.40	.125	3.18	.0575	1.46	.345	8.76	.187	4.75	#0-80 UNF
25S	.575	14.60	.470	11.94	.363	9.22	.370	9.40	.125	3.18	.0575	1.46	.225	5.71	.187	4.75	#0-80 UNF
31P	.650	16.51	.545	13.84	.435	11.05	.445	11.30	.125	3.18	.0575	1.46	.345	8.76	.187	4.75	#0-80 UNF
31S	.650	16.51	.545	13.84	.438	11.12	.445	11.30	.125	3.18	.0575	1.46	.225	5.71	.187	4.75	#0-80 UNF
37P	.725	18.41	.620	15.75	.510	12.95	.520	13.21	.125	3.18	.0575	1.46	.345	8.76	.187	4.75	#0-80 UNF
37S	.725	18.41	.620	15.75	.513	13.03	.520	13.21	.125	3.18	.0575	1.46	.225	5.71	.187	4.75	#0-80 UNF
51P	.900	22.86	.795	20.19	.685	17.40	.695	17.65	.125	3.18	.0575	1.46	.345	8.76	.187	4.75	#0-80 UNF
51S	.900	22.86	.795	20.19	.688	17.47	.695	17.65	.125	3.18	.0575	1.46	.225	5.71	.187	4.75	#0-80 UNF
65P	1.075	27.30	.970	24.64	.860	21.84	.870	22.10	.125	3.18	.0575	1.46	.345	8.76	.187	4.75	#0-80 UNF
65S	1.075	27.30	.970	24.64	.863	21.92	.870	22.10	.125	3.18	.0575	1.46	.225	5.71	.187	4.75	#0-80 UNF
69P	1.125	28.57	1.020	25.91	.910	23.11	.920	23.37	.125	3.18	.0575	1.46	.345	8.76	.187	4.75	#0-80 UNF
69S	1.125	28.57	1.020	25.91	.913	23.19	.920	23.37	.125	3.18	.0575	1.46	.225	5.71	.187	4.75	#0-80 UNF
85P	1.377	34.97	1.246	31.65	1.110	28.19	1.120	28.45	.150	3.81	.070	1.78	.375	9.53	.205	5.34	#2-56 UNC
85S	1.377	34.97	1.246	31.65	1.113	28.27	1.120	28.45	.150	3.81	.070	1.78	.270	6.86	.210	5.21	#2-56 UNC

© 2013 Glenair, Inc.

GLENAIR, INC. • 1211 AIR WAY • GLENDALE, CA 91201-2497 • 818-247-6000 • FAX 818-500-9912
www.glenair.com E-Mail: sales@glenair.com

891-012 and 891-013
Right Angle Mount PCB, Dual Row Nano Connector
Surface Mount Type

Dual Row Right Angle Surface Mount Board Layout—891-012 Plugs (Pin) Connectors

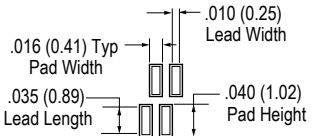

PAD/ FOOTPRINT DETAIL

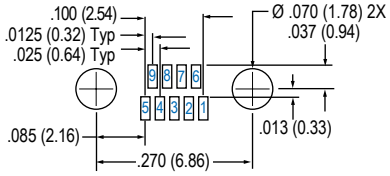

9 Contacts

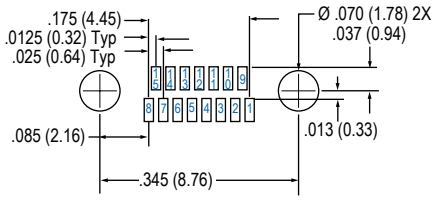

15 Contacts

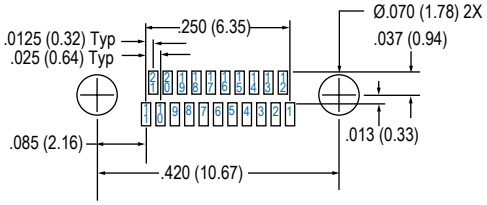

21 Contacts

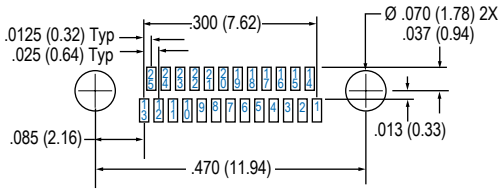

25 Contacts

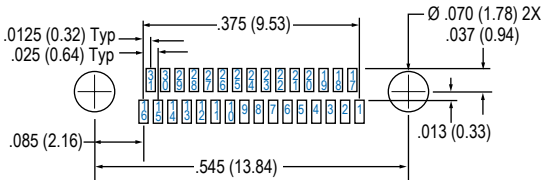

31 Contacts

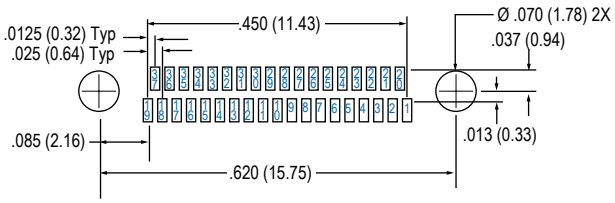

37 Contacts

Layouts shown are for connector mounting side of PC Board.

© 2013 Glenair, Inc.

GLENAIR, INC. • 1211 AIR WAY • GLENDALE, CA 91201-2497 • 818-247-6000 • FAX 818-500-9912
www.glenair.com **E-Mail: sales@glenair.com**

891-012 and 891-013
Right Angle Mount PCB, Dual Row Nano Connector
Surface Mount Type

Dual Row Right Angle Surface Mount Board Layout—891-012 Plug (Pin) Connectors

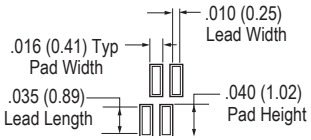

PAD/ FOOTPRINT DETAIL

51 Contacts

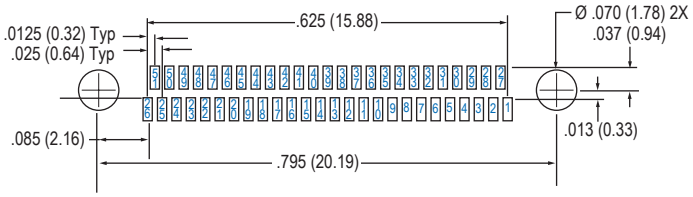

65 Contacts

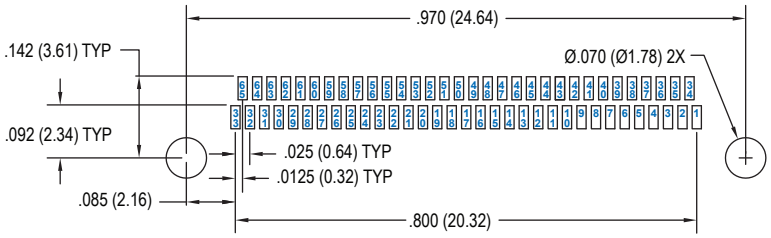

69 Contacts

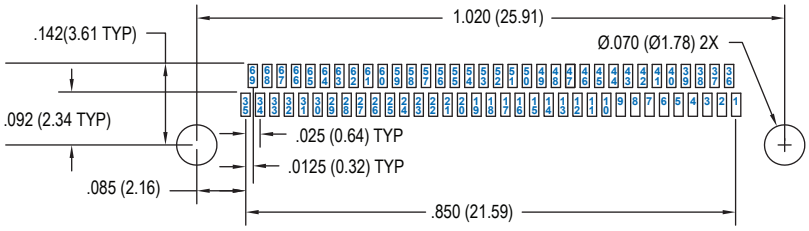

85 Contacts

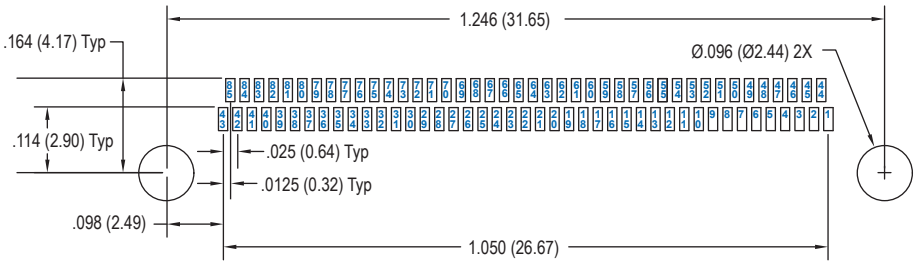

Layouts shown are for connector mounting side of PC Board.

© 2013 Glenair, Inc.

GLENAIR, INC. • 1211 AIR WAY • GLENDALE, CA 91201-2497 • 818-247-6000 • FAX 818-500-9912
www.glenair.com E-Mail: sales@glenair.com

891-012 and 891-013
Right Angle Mount PCB, Dual Row Nano Connector
Surface Mount Type

Dual Row Right Angle Surface Mount Board Layout—891-013 Receptacle (Socket) Connectors

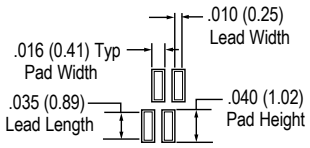

PAD/ FOOTPRINT DETAIL

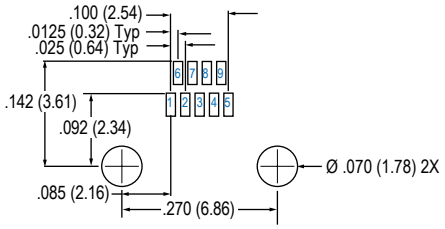

9 Contacts

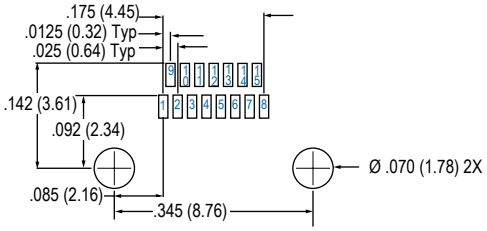

15 Contacts

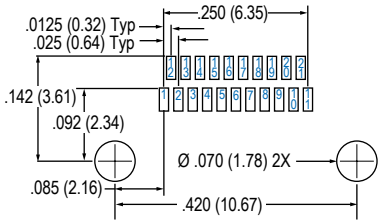

21 Contacts

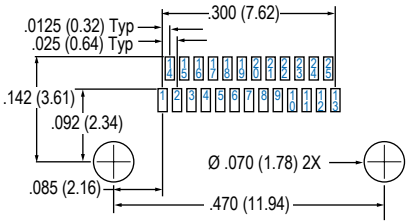

25 Contacts

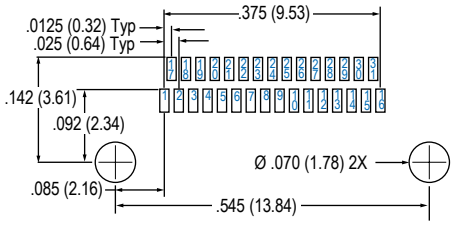

31 Contacts

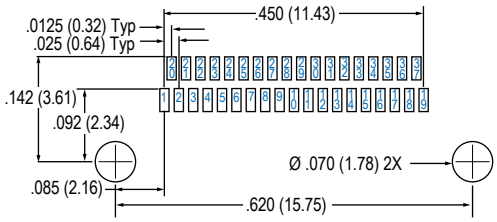

37 Contacts

Layouts shown are for connector mounting side of PC Board.

© 2013 Glenair, Inc.

GLENAIR, INC. • 1211 AIR WAY • GLENDALE, CA 91201-2497 • 818-247-6000 • FAX 818-500-9912
www.glenair.com **E-Mail: sales@glenair.com**

891-012 and 891-013
Right Angle Mount PCB, Dual Row Nano Connector
Surface Mount Type

Dual Row Right Angle Surface Mount Board Layout—891-013 Receptacle (Socket) Connectors

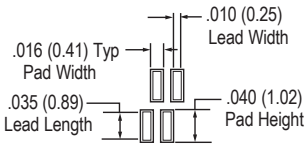

PAD/ FOOTPRINT DETAIL

51 Contacts

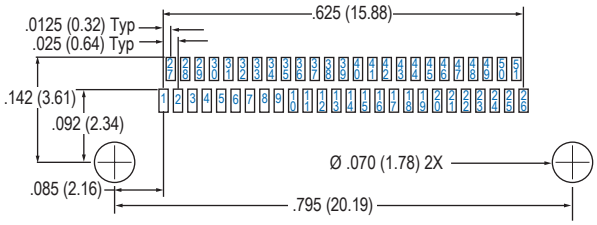

65 Contacts

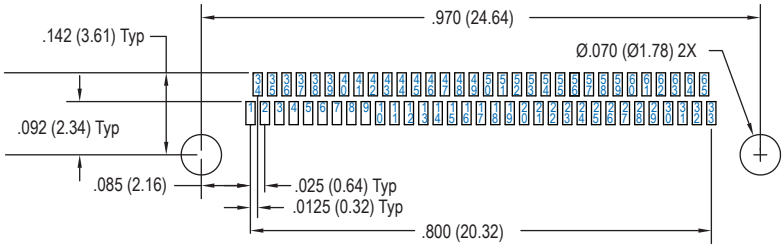

69 Contacts

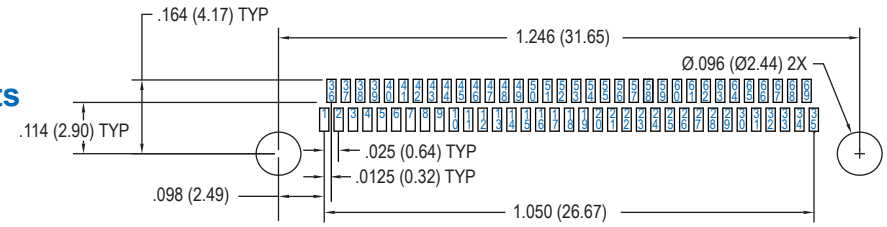

85 Contacts

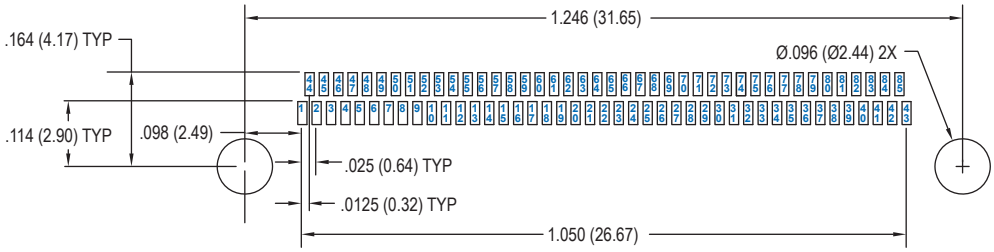

Layouts shown are for connector mounting side of PC Board.

© 2013 Glenair, Inc.

GLENAIR, INC. • 1211 AIR WAY • GLENDALE, CA 91201-2497 • 818-247-6000 • FAX 818-500-9912
www.glenair.com E-Mail: sales@glenair.com

891-014 and 891-015
Dual Row Nano Connector
Straddle Mount Type

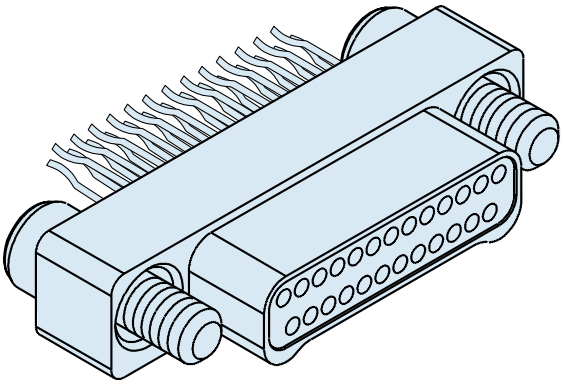

Straddle Mount PCB Nano Connectors feature gold alloy TwistPin contacts, offering premium performance and reliability for demanding applications. Available with female threads, or with jackscrews for use with flexible circuits.

Pre-Tinned PC Tails are coated with Sn63Pb37 tin-lead for excellent solderability.

Choose Aluminum, Titanium or Stainless Steel Shells in ten layouts from 9 to 85 contacts. Complies to the requirements of MIL-DTL-32139. These connectors are intermateable with any corresponding Glenair Series 891 Dual row metal shell nanominiature connector.

How to Order Straddle Mount PCB Connectors					
Sample Part Number	891-015	-37S	A1	-STM	T
Series	**891-014** Plug, Pin Contacts, Dual Row, Straddle Mount Nanominiature **891-015** Receptacle, Socket Contacts, Dual Row, Straddle Mount Nanominiature				
Insert Arrangement/ Contact Type	Plugs (891-014): **9P**, **15P**, **21P**, **25P**, **31P**, **37P**, **51P**, **65P**, **69P**, **85P** Receptacles (891-015): **9S**, **15S**, **21S**, **25S**, **31S**, **37S**, **51S**, **65S**, **69S**, **85P**				
Shell Material and Finish	**A1** - Aluminum Shell, Cadmium Plating **T** - Titanium Shell, Unplated **A2** - Aluminum Shell, Electroless Nickel Plating **S** - Stainless Steel Shell, Passivated				
Termination Type	**STM** - Straddle Mount				
Hardware	**J** - Jackscrew **T** - Female Thread				

Dimensions in inches (millimeters) and are subject to change without notice.

© 2013 Glenair, Inc.

GLENAIR, INC. • 1211 AIR WAY • GLENDALE, CA 91201-2497 • 818-247-6000 • FAX 818-500-9912
www.glenair.com E-Mail: sales@glenair.com

891-014 and 891-015
Dual Row Nano Connector
Straddle Mount Type

Straddle Mount Nano Dimensions

891-014 Plug (Pin) Connectors

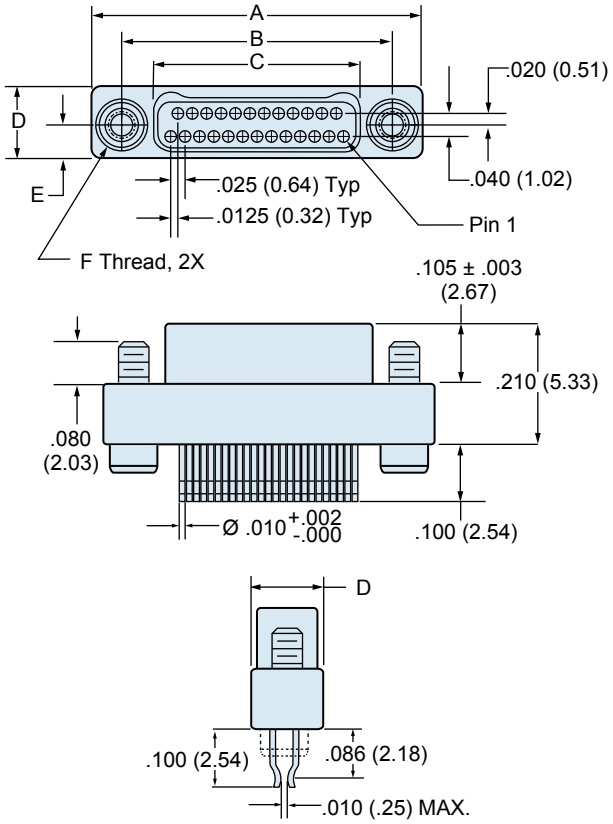

891-015 Receptacle (Socket) Connectors

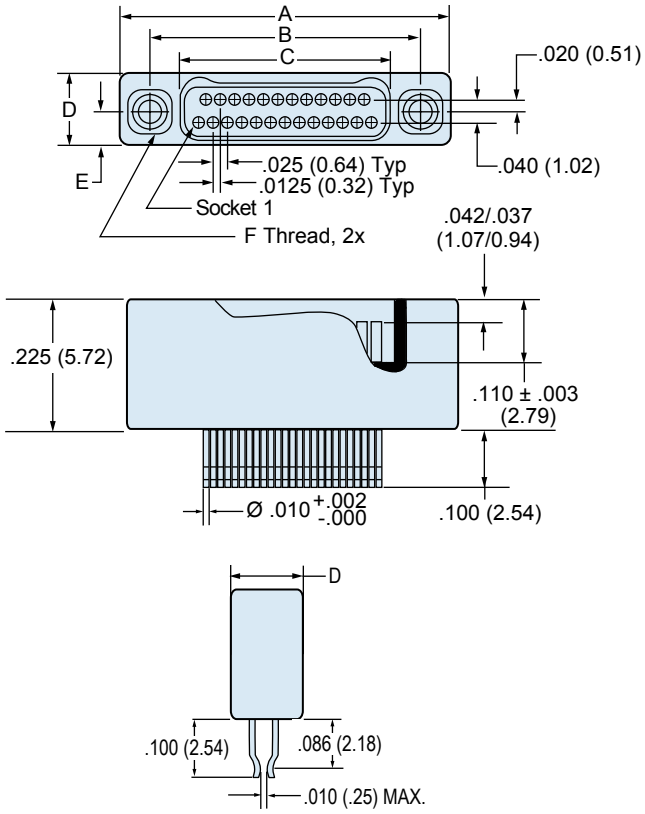

Layout	A		B BSC.		C BSC.		D		E BSC		F Thread
	In. ± .005	mm. ± 0.13	In.	mm.	In.	mm.	In. ± .005	mm ±.003	In.	mm	
9P	.375	9.52	.270	6.86	.160	4.06	.125	3.18	.0575	1.46	#0-80 UNF
9S	.375	9.52	.270	6.86	.163	4.14	.125	3.18	.0575	1.46	#0-80 UNF
15P	.450	11.43	.345	8.76	.235	5.97	.125	3.18	.0575	1.46	#0-80 UNF
15S	.450	11.43	.345	8.76	.238	6.04	.125	3.18	.0575	1.46	#0-80 UNF
21P	.525	13.33	.420	10.67	.310	7.87	.125	3.18	.0575	1.46	#0-80 UNF
21S	.525	13.33	.420	10.67	.313	7.95	.125	3.18	.0575	1.46	#0-80 UNF
25P	.575	14.60	.470	11.94	.360	9.14	.125	3.18	.0575	1.46	#0-80 UNF
25S	.575	14.60	.470	11.94	.363	9.22	.125	3.18	.0575	1.46	#0-80 UNF
31P	.650	16.51	.545	13.84	.435	11.05	.125	3.18	.0575	1.46	#0-80 UNF
31S	.650	16.51	.545	13.84	.438	11.12	.125	3.18	.0575	1.46	#0-80 UNF
37P	.725	18.41	.620	15.75	.510	12.95	.125	3.18	.0575	1.46	#0-80 UNF
37S	.725	18.41	.620	15.75	.513	13.03	.125	3.18	.0575	1.46	#0-80 UNF
51P	.900	22.86	.795	20.19	.685	17.40	.125	3.18	.0575	1.46	#0-80 UNF
51S	.900	22.86	.795	20.19	.688	17.47	.125	3.18	.0575	1.46	#0-80 UNF
65P	1.075	27.30	.970	24.64	.860	21.84	.125	3.18	.0575	1.46	#0-80 UNF
65S	1.075	27.30	.970	24.64	.863	21.92	.125	3.18	.0575	1.46	#0-80 UNF
69P	1.125	28.57	1.020	25.91	.910	23.11	.125	3.18	.0575	1.46	#0-80 UNF
69S	1.125	28.57	1.020	25.91	.913	23.19	.125	3.18	.0575	1.46	#0-80 UNF
85P	1.377	34.97	1.246	31.65	1.110	28.19	.150	3.81	.070	1.78	#2-56 UNC
85S	1.377	34.97	1.246	31.65	1.113	28.27	.150	3.81	.070	1.78	#2-56 UNC

© 2013 Glenair, Inc.

GLENAIR, INC. • 1211 AIR WAY • GLENDALE, CA 91201-2497 • 818-247-6000 • FAX 818-500-9912
www.glenair.com E-Mail: sales@glenair.com

891-014 and 891-015
Dual Row Nano Connector
Straddle Mount Type

Dual Row Straddle Mount Board Layout — 891-014 Plug (Pin) Contacts

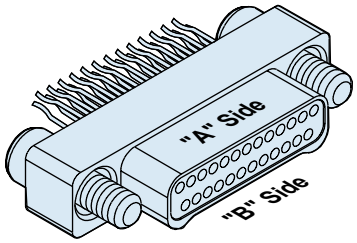

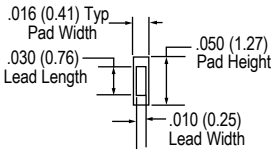

PAD/ FOOTPRINT DETAIL

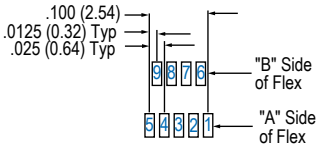

9 Contacts

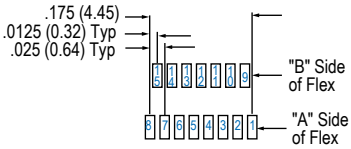

15 Contacts

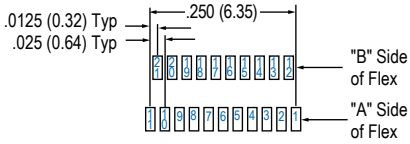

21 Contacts

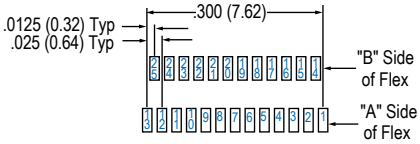

25 Contacts

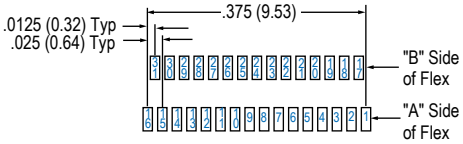

31 Contacts

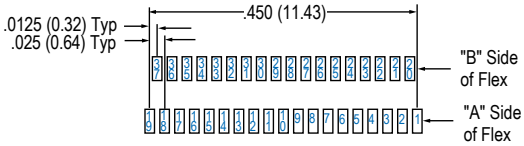

37 Contacts

Layouts shown are for connector mounting side of PC Board.

© 2013 Glenair, Inc.

GLENAIR, INC. • 1211 AIR WAY • GLENDALE, CA 91201-2497 • 818-247-6000 • FAX 818-500-9912
www.glenair.com E-Mail: sales@glenair.com

891-014 and 891-015
Dual Row Nano Connector
Straddle Mount Type

Dual Row Straddle Mount Board Layout — 891-014 Plug (Pin) Contacts

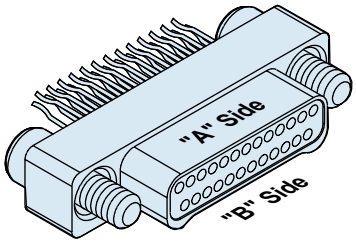

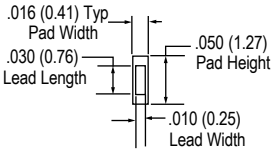

PAD/ FOOTPRINT DETAIL

51 Contacts

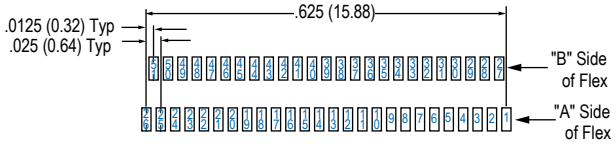

65 Contacts

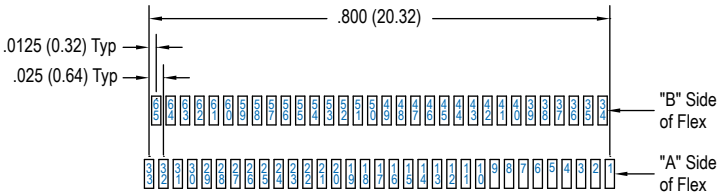

69 Contacts

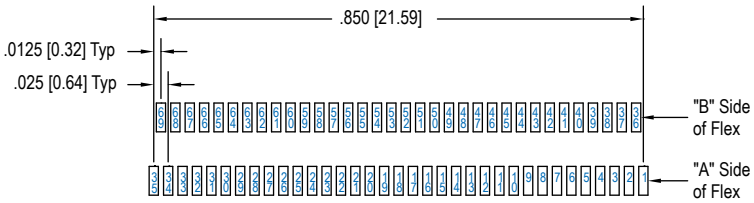

85 Contacts

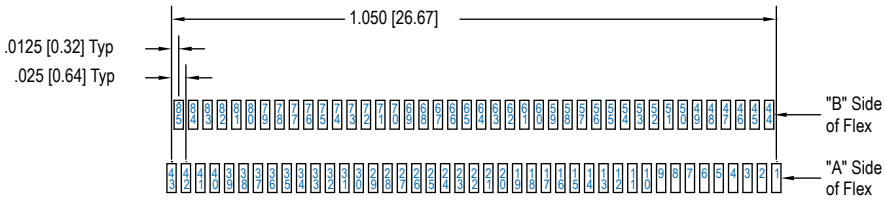

Layouts shown are for connector mounting side of PC Board.

© 2013 Glenair, Inc.

GLENAIR, INC. • 1211 AIR WAY • GLENDALE, CA 91201-2497 • 818-247-6000 • FAX 818-500-9912
www.glenair.com E-Mail: sales@glenair.com

891-014 and 891-015
Dual Row Nano Connector
Straddle Mount Type

Dual Row Straddle Mount Board Layout—891-015 Receptacle (Socket) Connectors

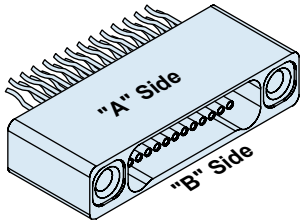

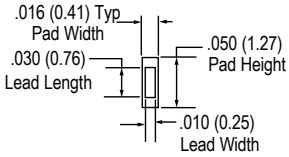

PAD/ FOOTPRINT DETAIL

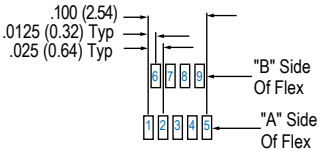

9 Contacts

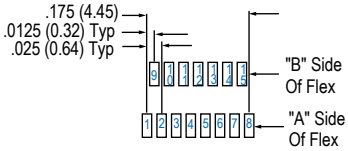

15 Contacts

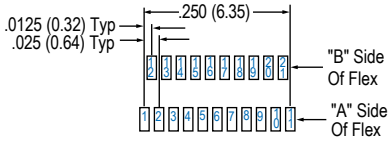

21 Contacts

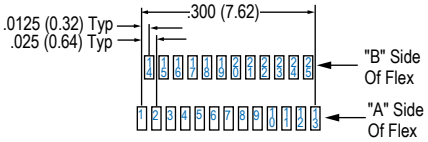

25 Contacts

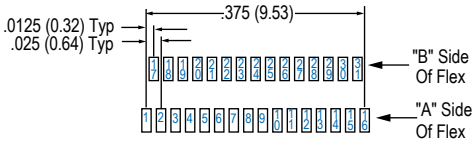

31 Contacts

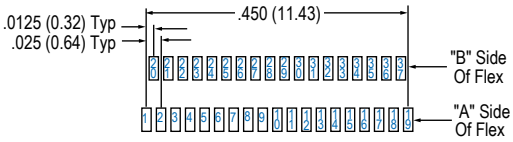

37 Contacts

Layouts shown are for connector mounting side of PC Board.

© 2013 Glenair, Inc.

GLENAIR, INC. • 1211 AIR WAY • GLENDALE, CA 91201-2497 • 818-247-6000 • FAX 818-500-9912
www.glenair.com **E-Mail: sales@glenair.com**

891-014 and 891-015
Dual Row Nano Connector
Straddle Mount Type

Dual Row Straddle Mount Board Layout—891-015 Receptacle (Socket) Connectors

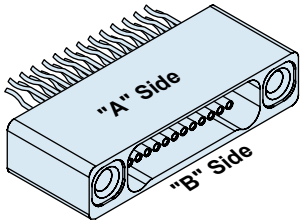

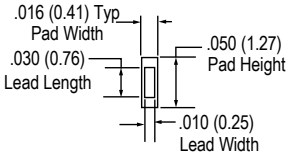

PAD/ FOOTPRINT DETAIL

51 Contacts

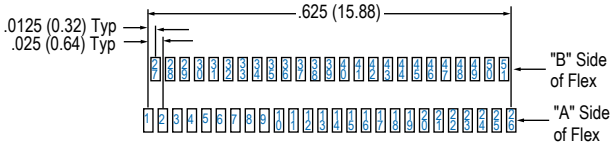

65 Contacts

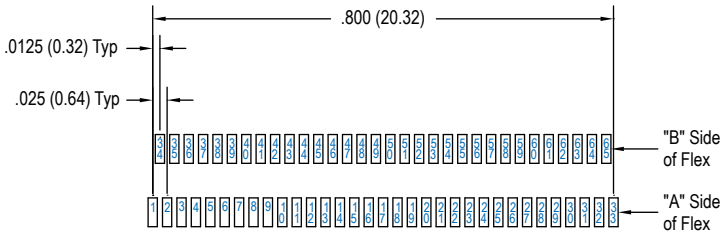

69 Contacts

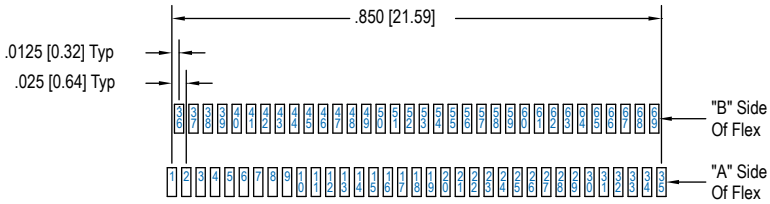

85 Contacts

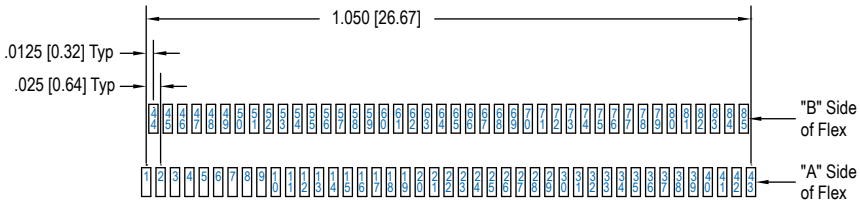

Layouts shown are for connector mounting side of PC Board.

© 2013 Glenair, Inc.

GLENAIR, INC. • 1211 AIR WAY • GLENDALE, CA 91201-2497 • 818-247-6000 • FAX 818-500-9912
www.glenair.com E-Mail: sales@glenair.com

Part Number	Description	Page No.
	Section B	
892-000	Circular Breakaway, Front Panel Mount Receptacle Connector with Insulated Wire	B-1
892-001	Circular Threaded, Front Panel Mount Receptacle Connector with Insulated Wire	B-3
892-002	Circular Breakaway, Rear Panel Mount Receptacle Connector with Insulated Wire	B-5
892-003	Circular Threaded, Rear Panel Mount Receptacle Connector with Insulated Wire	B-7
892-004	Circular Breakaway Inline Receptacle Connector with Insulated Wire	B-9
892-005	Circular Threaded, Inline Receptacle Connector with Insulated Wire	B-11
892-006	Circular Threaded Plug Connector with Insulated Wire	B-13
892-007	Circular Breakaway Plug Connector with Insulated Wire	B-15
	Section C	
893-008	Circular Breakaway, Rear Panel Mount Receptacle Connector with Straight PCB Termination	C-1
893-009	Circular Threaded, Rear Panel Mount Receptacle Connector with Straight PCB Termination	C-3
893-010	Circular Breakaway, Rear Panel Mount Receptacle Connector with Right Angle PCB Termination	C-5
893-011	Circular Threaded, Rear Panel Mount Receptacle Connector with Right Angle PCB Termination	C-8
	Section D	
890-016	Single Row Connector Saver	D-1
890-001 and -002	Single Row Nano Connector with Insulated Wire	D-3
890-003 and -004	Single Row Nano Connector with Uninsulated Wire	D-5
890-005	Single Row Nano Back-To-Back Connector	D-7
	Section E	
891-016	Dual Row Connector Saver	E-1
891-001 and -002	Dual Row Nano Connector with Insulated Wire	E-3
891-003 and -004	Single Row Nano Connector with Uninsulated Wire	E-5
891-005	Dual Row Nano Back-To-Back Connector	E-7
	Section F	
MIL-DTL-32139/01 and /02	Single Row Nano with Insulated Wire	F-1
MIL-DTL-32139/03 and /04	Dual Row Nano with Insulated Wire	F-3
	Section G	
890-006 and -007	Vertical Mount PCB, Single Row Connector	G-1
890-008 and -009	Right Angle Mount PCB, Single Row Nano Connector	G-5
890-010 and -011	Vertical Mount PCB, Single Row Nano Connector	G-9
890-012 and -013	Right Angle Mount PCB, Single Row Nano Connector	G-13
	Section H	
891-006 and -007	Vertical Mount PCB, Dual Row Nano Connector	H-1
891-008 and -009	Right Angle Mount PCB, Dual Row Nano Connector	H-7
891-010 and -011	Vertical Surface Mount PCB, Dual Row Nano Connector	H-14
891-012 and -013	Right Angle Mount PCB, Dual Row Nano Connector	H-20
891-014 and -015	Straddle Mount PCB, Dual Row Nano Connector	H-26

© 2013 Glenair, Inc.

GLENAIR, INC. • 1211 AIR WAY • GLENDALE, CA 91201-2497 • 818-247-6000 • FAX 818-500-9912
www.glenair.com E-Mail: sales@glenair.com

The world's broadest selection of interconnect products–in stock and ready for immediate same-day shipment.

Glenair's World of Interconnect Solutions

A complete overview of Glenair's innovative range of interconnect products and services, including Military Standard and commercial equivalent connectors and accessories.

StarShield™ Zero Length Shield Termination Backshells

The StarShield™ Backshell offers optimal grounding of EMI/EMP braided shielding. The unique StarShield™ configuration eliminates the need for drain wires or pigtails.

Micro-D TwistPin Connectors and Accessories

Glenair offers both Military Standard 83513 Micro-D connectors as well as COTS selections, backshells, mounting hardware and more. Our TwistPin contact provides superior performance.

Composite Thermoplastic Interconnect Solutions

Glenair is the world's leading manufacturer of composite interconnect solutions. We are the 'go-to' supplier for advanced composite technologies for commerical and military interconnect applications.

EMI/EMP Filter Connectors

MIL-DTL-38999 type EMI/EMP filter connectors, as well as other Military Standard and commercial electromagnetic shielding technologies. Also includes Glenair Series 80 "Mighty Mouse" filter products.

Military Standard Connector Accessories

If the MS connector accessory you need isn't in here – it doesn't exist. Search this easy-to-use catalog by accessory type or Mil-Spec slash number, then place your order against Glenair's 60,000 part number same-day inventory.

Fiber Optic Interconnect Solutions

Tactical fiber optic connectors, cables, and termini for airframe, shipboard, and military ground vehicles. Catalog features Glenair's innovative high-density (GHD) connector system for reduced size and weight applications.

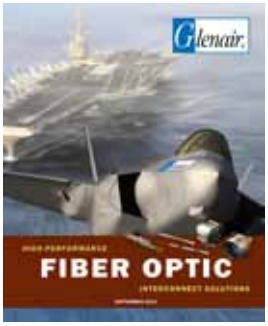

Series 80 "Mighty Mouse" Connectors and Cables

Glenair's revolutionary connector series that reduces interconnect system size and weight by 50% compared to standard MIL-DTL-38999 connectors. Now used on hundreds of mission-critical military and commercial applications.

Visit us at www.glenair.com and use the literature order form for immediate catalog fulfillment

Out of This World

INTERCONNECT SOLUTIONS

Glenair, Inc.
1211 Air Way • Glendale, California • 91201-2497
Telephone: 818-247-6000 • Fax: 818-500-9912 • sales@glenair.com
www.glenair.com

Glenair Power Products Group
860 N. Main Street Extension
Wallingford, CT
06492
Telephone: 203-741-1115
Facsimile: 203-741-0053
sales@glenair.com

Glenair UK Ltd
40 Lower Oakham Way
Oakham Business Park
P.O. Box 37, Mansfield
Notts, NG18 5BY England
Telephone: +44-1623-638100
Facsimile: +44-1623-638111
sales@glenair.co.uk

Glenair Microway Systems
7000 North Lawndale Avenue
Lincolnwood, IL
60712
Telephone: 847-679-8833
Facsimile: 847-679-8849

Glenair Nordic AB
Gustav III : S Boulevard 46
S - 169 27 Solna
Sweden
Telephone: +46-8-50550000
Facsimile: +46-8-50550001
sales@glenair.se

Glenair Electric GmbH
Schaberweg 28
D. 61348 Bad Homburg
Germany
Telephone: 06172 / 68 16 0
Facsimile: 06172 / 68 16 90
germany@glenair.com

Glenair Iberica
C/ La Vega, 16
45612 Velada
Spain
Telephone: +34-925-89-29-88
Facsimile: +34-925-89-29-87
sales@glenair.es

Glenair Italia S.p.A.
Via Del Lavoro, 7
40057 Quarto Inferiore –
Granarolo dell'Emilia
Bologna, Italy
Telephone: +39-051-782811
Facsimile: +39-051-782259
info@glenair.it

Glenair France SARL
7, Avenue Parmentier
Immeuble Central Parc #2
31200 Toulouse
France
Telephone: +33-5-34-40-97-40
Facsimile: +33-5-61-47-86-10
sales@glenair.fr

© 2013 Glenair, Inc.

Printed in U.S.A.